“N”

Graphics
Eagle Vines – Sprint Facility

NAPA COUNTY LAND USE PLAN 2008 - 2030

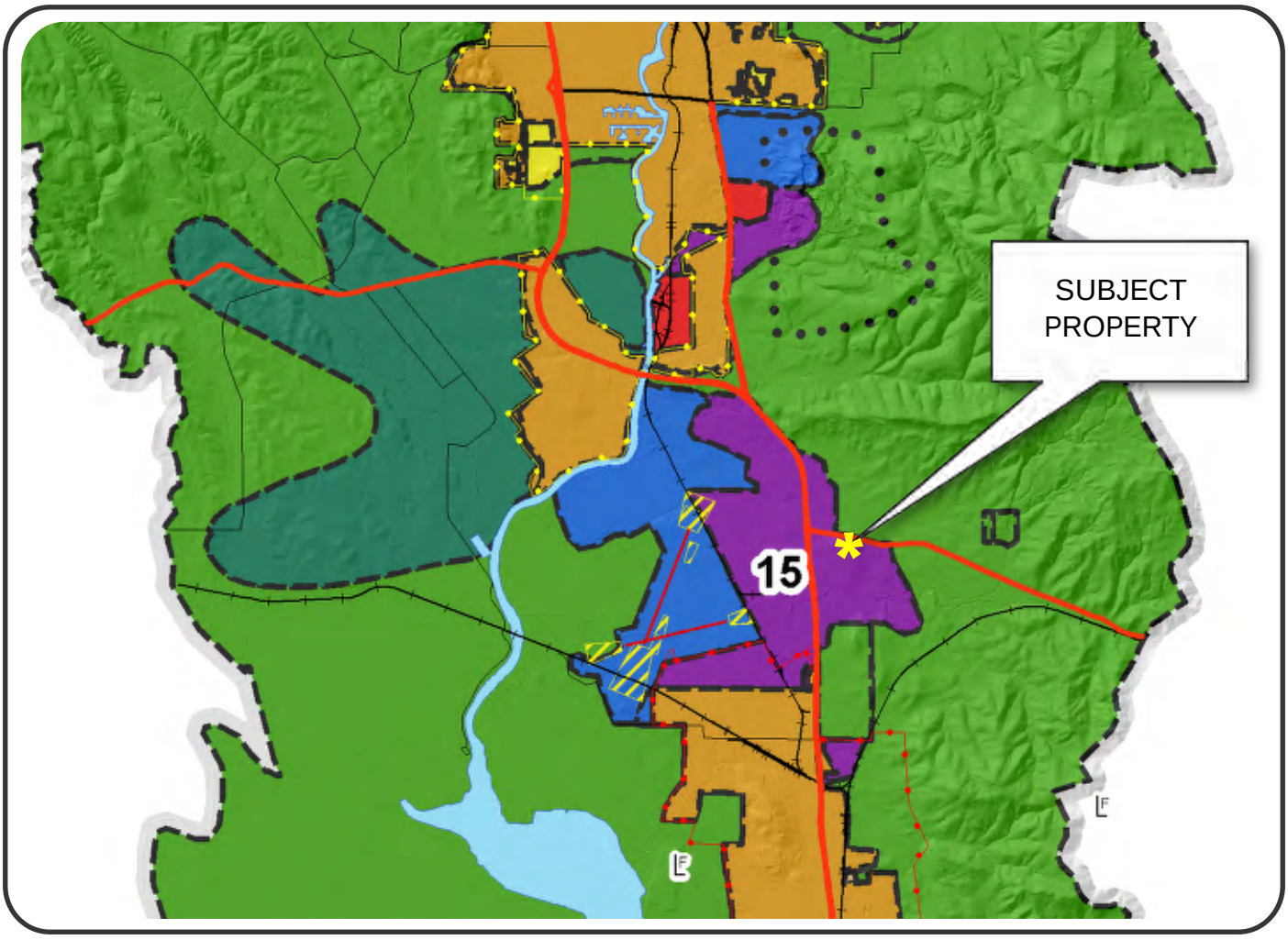

SCALE IN MILES

0 2

LEGEND

N

URBANIZED OR NON-AGRICULTURAL

- Study Area
- Cities
- Urban Residential*
- Rural Residential*
- Industrial
- Public-Institutional
- Napa Pipe Mixed Use

OPEN SPACE

- Agriculture, Watershed & Open Space
- Agricultural Resource

TRANSPORTATION

- Mineral Resource
- Limited Access Highway
- Major Road
- American Canyon ULL
- City of Napa RUL
- Landfill - General Plan
- Secondary Road
- Airport
- Railroad
- Airport Clear Zone

* See Action Item AG/LU-114.1 regarding agriculturally zoned areas within these land use designations

APN
057-060-007
03-10-2020
UP

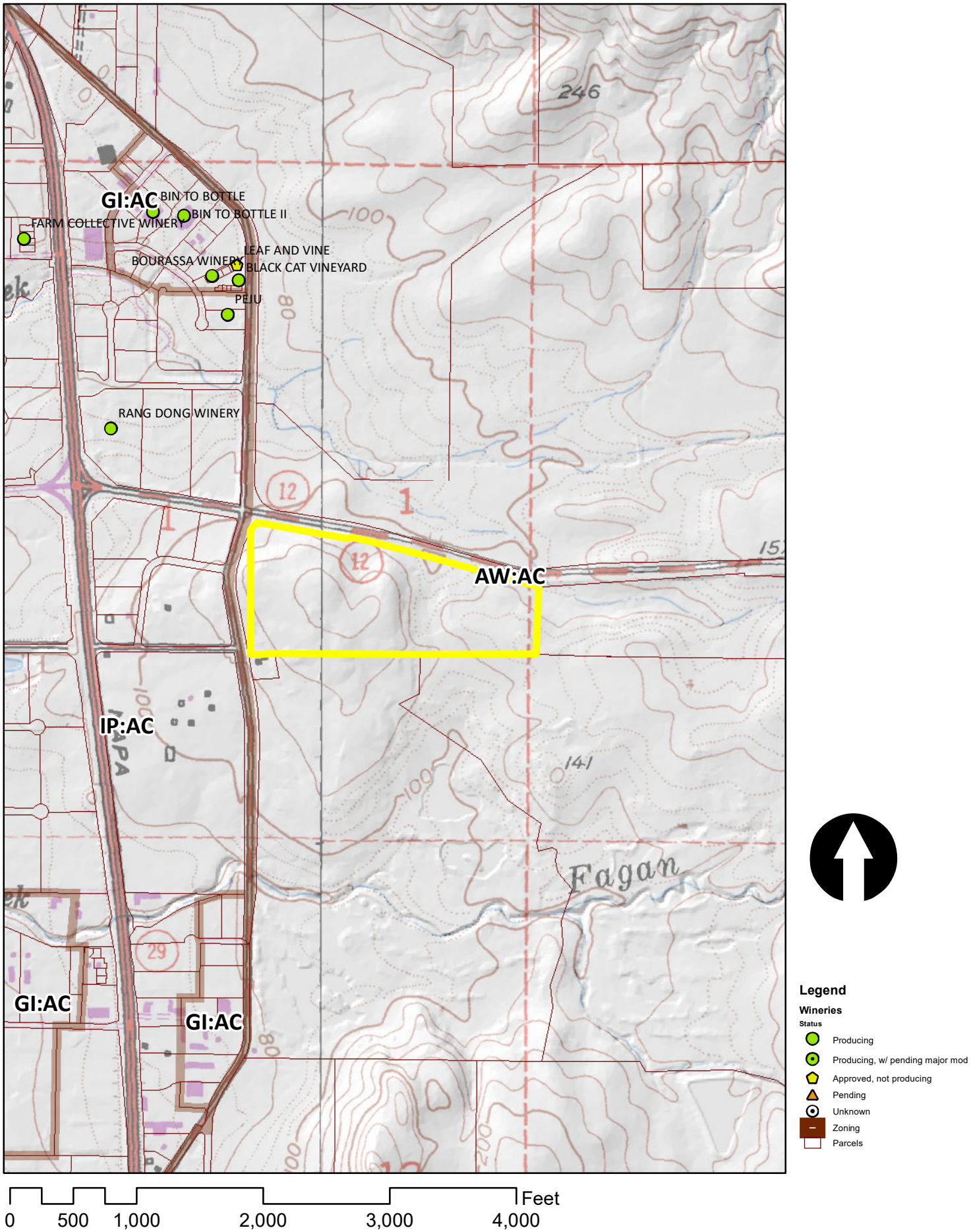
GI:AC
BIN TO BOTTLE
BIN TO BOTTLE II
FARM COLLECTIVE WINERY
LEAF AND VINE
BOURASSA WINERY
BLACK CAT VINEYARD
PEJU
RANG DONG WINERY
AW:AC
IP:AC
GI:AC
GI:AC
Fagan
Legend
Wineries
Status
Producing
Producing, w/ pending major mod
Approved, not producing
Pending
Unknown
Zoning
Parcels
0
500
1,000
2,000
3,000
4,000
Feet

0 200 400 800 1,200 1,600 Feet

Aerials: Napa County, 2018

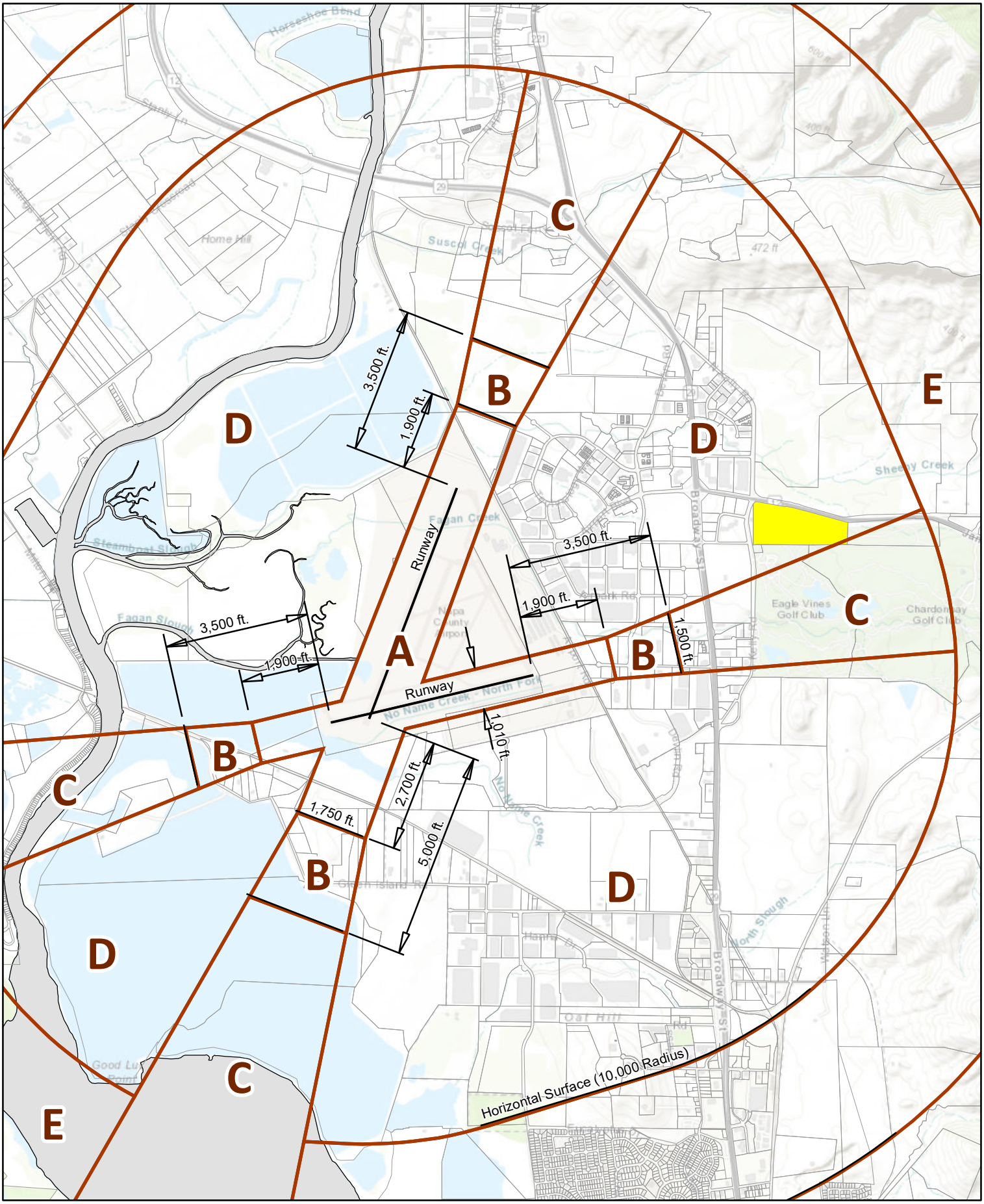

Compatibility Plan

Napa County Airport

Exhibit "D"

Horizontal Datum: NAD 83,
CA State Plane Coordinates,
Zone II, feet

Disclaimer: This map was prepared for informational purposes only. No liability is assumed for the accuracy of the data delineated hereon.

A Tradition of Stewardship
A Commitment to Service

0 750 1,500 3,000 '

Napa County PBES - 03/10/2020

SITE NAME: NAPA AIRPORT HWY 12 & 29 RELO

CASCADE □: SF25XC335-A

SITE ADDRESS: 580 SOUTH KELLY ROAD AMERICAN CANYON, CA 94503

SITE TYPE: MONOPOLE / EXTERIOR EQUIPMENT

PROJECT DESCRIPTION

CONSTRUCTION OF AN UNMANNED TELECOMMUNICATIONS FACILITY

1. INSTALL TRENCHING FROM (P) POWER POINT OF CONNECTION TO (P) 200A SPRINT ELEC PANEL
2. INSTALL (P) 18'-0" +/- 255 SQFT MONOPINE LEASE AREA
3. INSTALL 15'□20' SPRINT LEASE AREA 255 SQFT MONOPINE LEASE AREA
4. INSTALL (P) 10'□20' CONCRETE EQUIPMENT PAD
5. INSTALL (P) 55' TALL MONOPINE
6. INSTALL (2) ANTENNAS AT SECTORS A, B, C - (6) TOTAL
7. INSTALL (4) RRUs AT SECTORS A, B, C - (12) TOTAL
8. INSTALL (1) 30 KW BACKUP DIESEL GENERATOR
9. INSTALL (1) MICROWAVE ANTENNA & EQUIPMENT
10. INSTALL CHAIN LINK FENCE w/ ANTI-CLIMB BARRIERS
11. INSTALL (2) HYBRID LINE PER SECTOR FOR 800 RRU, (1) (P) & (1) (F) PER SECTOR, TOTAL OF (6)

PROJECT INFORMATION

Property Information:
Site Name: NAPA AIRPORT HWY 12 & 29 RELO

Cascade: SF25XC335-A

Site Address: 580 South Kelly Road
American Canyon, CA 94503

A.P.N. Num□er: 057-060-007

Current Use: TELECOMMUNICATIONS FACILITY

Proposed Use: TELECOMMUNICATIONS FACILITY

Jurisdiction: County of Napa

Latitude: 38°13' 14.20"
Longitude: 122°15' 10.10"

Ground Elevation: ± 148.9'

Property Owner:
EAGLE VINES VINEYARD & GOLF CLUB LLC
580 SOUTH KELLY ROAD
AMERICAN CANYON, CA 94503

Power Agency:
PG&E
1 MARKET STREET, SPEAR TOWER
SAN FRANCISCO, CA 94105
ph: (800) 743-5000

Telephone Agency:
AT&T CALIFORNIA
525 MARKET STREET
SAN FRANCISCO, CA 94105
ph: (800) 310-2355

PROJECT TEAM

Applicant / Lessee:
SPRINT
12567 ALCOSTA BLVD, SUITE 300
SAN RAMON, CA 94583
contact: MOISES PALACIOS
email: moises.palacios□ sprint.com
ph: (925) 380-2223

Architect:
BORGES ARCHITECTURAL GROUP, INC.
1478 STONE POINT DRIVE, SUITE 350
ROSEVILLE, CA 95661
contact: JOHN MCDONNELL
email: telecomgroup□ □orgesarch.com
ph: (916) 782-7200

SHEET INDEX

		REV
T-1	TITLE SHEET	G
C-1	EXISTING SITE CONDITIONS	G
A-1	OVERALL SITE PLAN	G
A-2	ENLARGED EQUIPMENT PLANS	G
A-3.1	EXTERIOR SITE ELEVATIONS	G
A-3.2	EXTERIOR SITE ELEVATIONS	G
A-3.3	EXTERIOR SITE ELEVATIONS	G
A-4.1	MICROWAVE SPECIFICATIONS	G
A-4.2	BATTERY SPECIFICATIONS	G
A-4.3	GENERATOR SPECIFICATIONS	G
A-5	CONSTRUCTION DETAILS	G

CODE COMPLIANCE

ALL WORK AND MATERIALS SHALL BE PERFORMED AND INSTALLED IN ACCORDANCE WITH THE CURRENT EDITIONS OF THE FOLLOWING CODES AS ADOPTED BY THE LOCAL GOVERNING AUTHORITIES. NOTHING IN THESE PLANS IS TO BE CONSTRUED TO PERMIT WORK NOT CONFORMING TO THESE CODES.

1) 2016 CALIFORNIA ADMINISTRATIVE CODE, CHAPTER 10, PART 1, TITLE 24 CODE OF REGULATIONS
2) 2016 CALIFORNIA BUILDING CODE (CBC) WITH CALIFORNIA AMENDMENTS, BASED ON THE 2015 IBC (PART 2, VOL 1-2)
3) 2016 CALIFORNIA RESIDENTIAL CODE (CRC) WITH APPENDIX H, PATIO COVERS, BASED ON THE 2015 IRC (PART 2.5)
4) 2016 CALIFORNIA GREEN BUILDINGS STANDARDS CODE (CALGREEN) (PART 11) (AFFECTED ENERGY PROVISIONS ONLY
5) 2016 CALIFORNIA FIRE CODE (CFC), BASED ON THE 2015 IFC, WITH CALIFORNIA AMENDMENTS (PART 9)
6) 2016 CALIFORNIA MECHANICAL CODE (CMC), BASED ON THE 2015 UMC (PART 4)
7) 2016 CALIFORNIA PLUMBING CODE (CPC), BASED ON THE 2015 UPC (PART 5)
8) 2016 CALIFORNIA ELECTRICAL CODE (CEC) WITH CALIFORNIA AMENDMENTS, BASED ON THE 2011 NEC (PART 3)
9) 2016 CALIFORNIA ENERGY CODE (CEC)
10) ANSI / EIA-TIA-222-G
11) 2015 NFPA 101, LIFE SAFETY CODE
12) 2016 NFPA 72, NATIONAL FIRE ALARM CODE
13) 2016 NFPA 13, FIRE SPRINKLER CODE

VICINITY MAP

DIRECTIONS FROM SPRINT

DIRECTIONS FROM SPRINT'S OFFICE AT 12567 ALCOSTA BLVD., SAN RAMON, CA 94583

Head southeast on Alcosta Blvd toward Overloo□Dr
Turn right onto Bollinger Canyon Rd
Use the right 2 lanes to merge onto I-680 N via the ramp to Sacramento
Merge onto I-680 N
Keep left to stay on I-680 N
Keep left at the for□to stay on I-680 N
Keep left at the for□to continue on I-680
Use the left lane to ta□e e□it 71B to merge onto CA-12 W/I-80 W toward Napa/San Francisco
Ta□e e□it 39B for CA-12 toward Napa/Sonoma
Continue onto CA-12 W
Turn left onto S Kelly Rd
Turn right onto Greenwood Rd
Turn left onto S Kelly Rd

SPECIAL INSPECTIONS

1. EXPANSION BOLTS INTO EXISTING CONCRETE
2. 3000 PSI CONCRETE

APPROVALS

APPROVED BY:	INITIALS:	DATE:
AT&T:		
VENDOR:		
R.F.:		
LEASING / LANDLORD:		
ZONING:		
CONSTRUCTION:		
POWER / TELCO:		
PG&E:		

OCCUPANCY AND CONSTRUCTION TYPE

OCCUPANCY : U (UNMANNED)

CONSTRUCTION TYPE: V-B

DISABLED ACCESS REQUIREMENTS

FACILITY IS UNMANNED AND NOT FOR HUMAN HABITATION, ACCESSIBILITY ACCESS AND REQUIREMENTS ARE NOT REQUIRED, IN ACCORDANCE WITH CALIFORNIA BUILDING CODE, CODE OF REGULATIONS, TITLE 24, PART 2, VOLUME 1, CHAPTER 11B, DIVISION 2, SECTION 11B-203.5

GENERAL CONTRACTOR NOTES

DO NOT SCALE DRAWINGS

THESE DRAWINGS ARE FORMATTED TO BE FULL SIZE AT 24" □36". CONTRACTOR SHALL VERIFY ALL PLANS AND EXISTING DIMENSIONS AND CONDITIONS ON THE JOBSITE AND SHALL IMMEDIATELY NOTIFY THE ARCHITECT/ENGINEER IN WRITING OF ANY DISCREPANCIES BEFORE PROCEEDING WITH THE WORK OR MATERIAL ORDERS OR BE RESPONSIBLE FOR THE SAME.

DIGALERT
800-227-2600
Call 2 Full Working Days In Advance

PREPARED FOR

Sprint
12657 Alcosta Blvd, Suite 300
San Ramon, California 94583

PRECISION
5098 Foothills Blvd 3-119
Roseville, CA 95747

Sprint Cascade:
SF25XC335-A

Architect:
ARCHITECTURE PLANNING INTERIORS
ARCHITECTURAL GROUP Borges
1478 STONE POINT DRIVE SUITE 350 ROSEVILLE CA 95661
Tel 916 782 7200
Fax 916 773 3037
BORGESARCH.COM

SPRINT CASCADE:	SF25XC335-A
PROJECT NO:	T-16503-1
DRAWN BY:	DAG
CHECKED BY:	JM

REV	DATE	DESCRIPTION
G	07/26/19	90% ZD REV 6
F	05/31/19	90% ZD REV 5
E	05/02/19	90% ZD REV 4
D	03/13/19	90% ZD REV 3
C	10/23/18	90% ZD REV 2
B	09/14/18	90% ZD REV 1
A	02/27/18	90% ZD SUBMITTAL

Licensor:

IT IS A VIOLATION OF LAW FOR ANY PERSON, UNLESS THEY ARE ACTING UNDER THE DIRECTION OF A LICENSED PROFESSIONAL ENGINEER, TO ALTER THIS DOCUMENT.

Issued For:
07/26/19
90% ZD Rev 6

SHEET TITLE:
TITLE SHEET

SHEET NUMBER:
□-1

Plot Date: 7/26/2019 4:18:36 PM File Name:P:\2016\T-16503_Precision Site Development LLC\SF25XC335- \SF25XC335 Napa Permit\Sheet\Title Sheet.dwg Plotted By:David Gomez

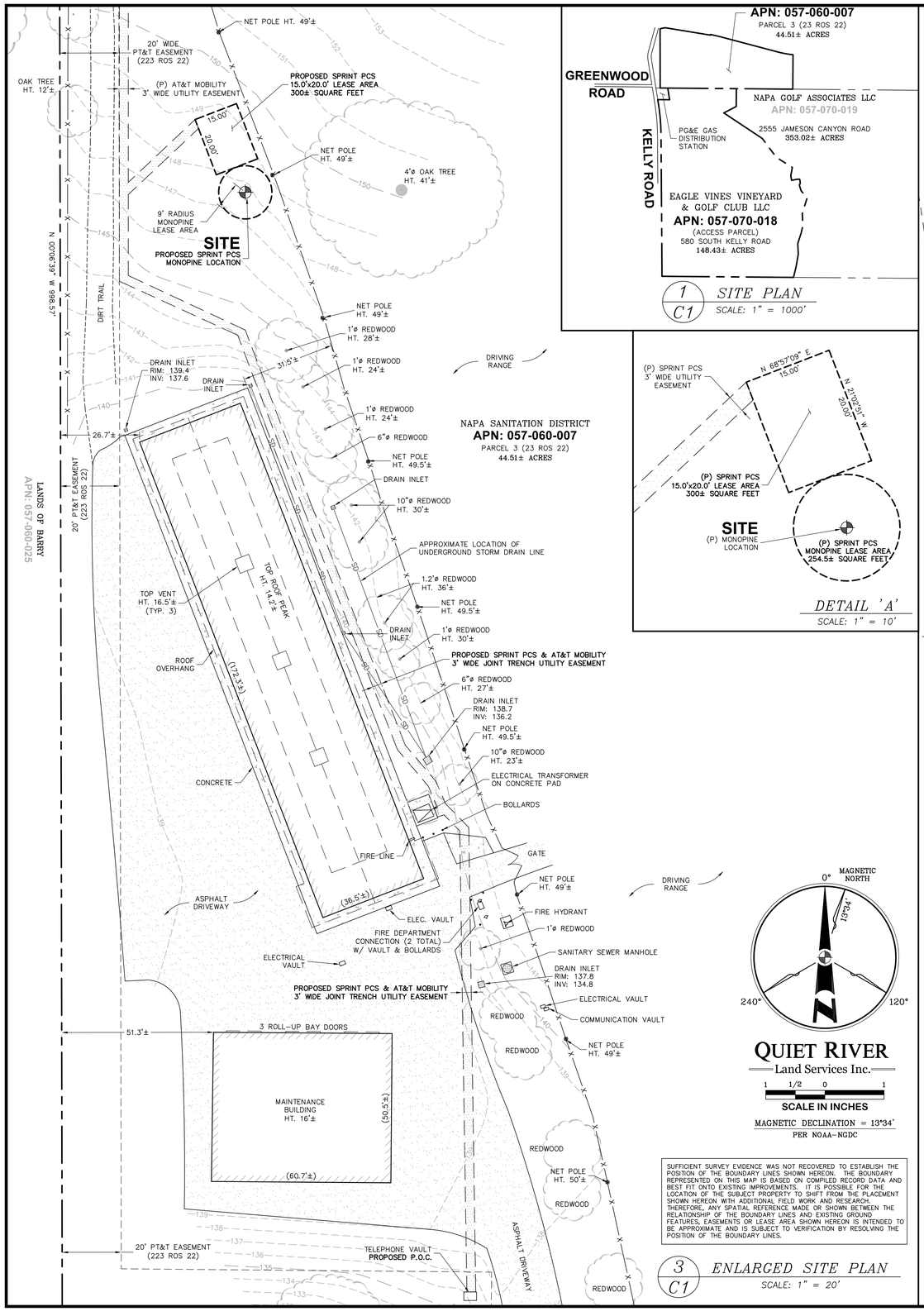

3 C1 ENLARGED SITE PLAN
SCALE: 1" = 20'

1 C1 SITE PLAN
SCALE: 1" = 1000'

DETAIL 'A'
SCALE: 1" = 10'

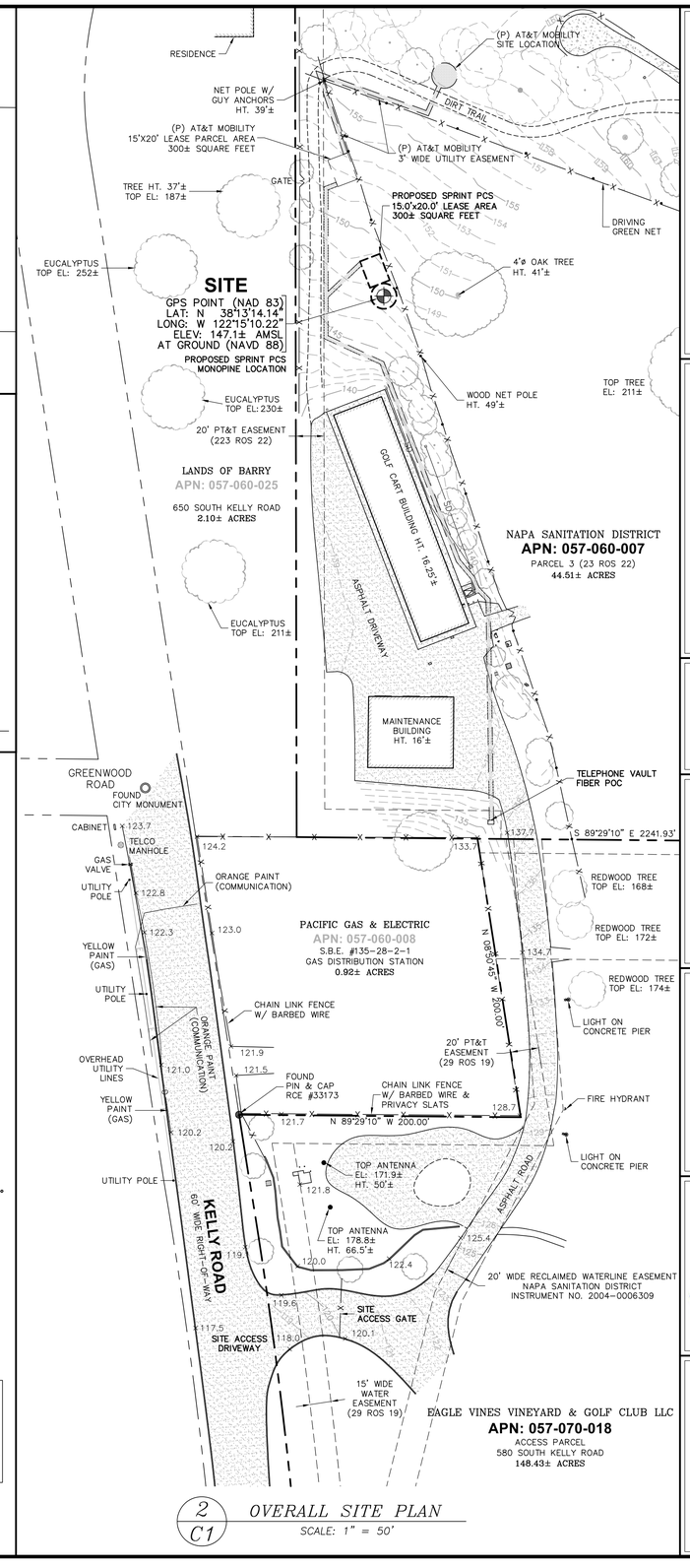

2 C1 OVERALL SITE PLAN
SCALE: 1" = 50'

QUIET RIVER
Land Services Inc.

1 1/2 0 1
SCALE IN INCHES

MAGNETIC DECLINATION = 13°34'
PER NOAA-NGDC

SUFFICIENT SURVEY EVIDENCE WAS NOT RECOVERED TO ESTABLISH THE POSITION OF THE BOUNDARY LINES SHOWN HEREON. THE BOUNDARY REPRESENTED ON THIS MAP IS BASED ON COMPILED RECORD DATA AND BEST FIT ONTO EXISTING IMPROVEMENTS. IT IS POSSIBLE FOR THE LOCATION OF THE SUBJECT PROPERTY TO SHIFT FROM THE PLACEMENT SHOWN HEREON WITH ADDITIONAL FIELD WORK AND RESEARCH. THEREFORE, ANY SPATIAL REFERENCE MADE OR SHOWN BETWEEN THE RELATIONSHIP OF THE BOUNDARY LINES AND EXISTING GROUND FEATURES, EASEMENTS OR LEASE AREA SHOWN HEREON IS INTENDED TO BE APPROXIMATE AND IS SUBJECT TO VERIFICATION BY RESOLVING THE POSITION OF THE BOUNDARY LINES.

P:_2018 TO BE ARCHIVED\PDND1801\dwg\PDND1801-2.dwg Jul. 29, 2019 - 3:46pm Ryan

VICINITY MAP
NOT TO SCALE

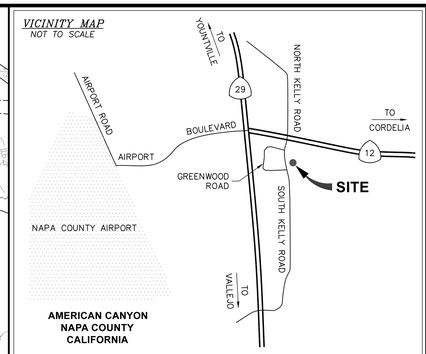

PROPERTY INFORMATION

Owner: NAPA SANITATION DISTRICT
Address: 1515 SOSCOL FERRY ROAD, NAPA, CA 94558

Site: SF25XC335 / EAGLE VINES GOLF COURSE
Address: 580 SOUTH KELLY ROAD, AMERICAN CANYON, CA 94503

Assessor's Parcel Number: 057-060-007

Height of Building/Tower: N/A

Title Report:
NO TITLE REPORT FURNISHED. EXCEPTIONS TO THE TITLE AND RESERVATIONS THEREFROM COULD NOT BE DETERMINED. BOUNDARY INFORMATION SHOWN IS COMPILED FROM AVAILABLE RECORD DATA.

Legal Description:
PROPERTY SITUATED IN THE CITY OF AMERICAN CANYON, COUNTY OF NAPA, STATE OF CALIFORNIA, BEING PARCEL 3 OF RECORD OF SURVEY MAP FILED FOR RECORD IN BOOK 23 OF MAPS AT PAGE 22, RECORDS OF SAID COUNTY.

FEMA FLOOD ZONE DESIGNATION
National Flood Insurance Program

County: NAPA — Effective Date: AUGUST 3, 2016
Community-Panel Number: 06055C-0607-F
The Flood Zone Designation for this site as plotted by scale is:

ZONE X (no shading) – Areas of minimal flood hazard.

SURVEY DATA

NAD 83 Datum:
Lat: N 38°13'14.14" Long: W 122°15'10.22"
Datum Base: NAD 83 Equipment Used: CHCX90D-OPUS Receiver (See Note 2)
Site Ground Elevation: 147.6± AMSL (NAVD88) AT GPS SITE LOCATION.
Basis of Elevations:
GLOBAL POSITIONING SYSTEM (GPS)
(SEE NOTE 2)
Basis of Bearings:
RECORD OF SURVEY MAP FILED IN BOOK 29 AT PAGE 19 IN THE RECORDS OF NAPA COUNTY, AND TWO FOUND MONUMENTS AS SHOWN.
Date of Field Survey: JANUARY 30, 2018

NOTES

1.) This is not a boundary survey. This is a specialized topographic map with property lines and easements being a graphic depiction of various information gathered from preliminary title reports, back-up documents of record, maps and available monuments found during the field survey. No property monuments were set. No title research was performed by Quiet River Land Services, Inc.

2.) The latitude, longitude and elevation shown hereon were derived from post-processed L-1/L-2 data collected using Navstar Global Positioning System (GPS) and a CHCX90D-OPUS Receiver. CHC Navigation specifications report decimeter level accuracy (horizontally) when data is properly collected and processed. (Elevation = ±3.0 feet.)

3.) Unless otherwise noted, no underground utility locating service company was contacted prior to this map being prepared; therefore, there may be non-visible or obscure utilities existing on the property not shown on this map – so CALL BEFORE YOU DIG.

4.) Any electronic digital media provided by Quiet River Land Services, Inc. to our client is a courtesy and is not to be reproduced, distributed, sold, altered, revised, edited or amended without the express written consent of an Officer of Quiet River Land Services, Inc. Further, only the final stamped, signed and dated original "hard copy" version of our survey or map is considered to be our legally recognized product.

SURVEYOR'S STATEMENT

I, the undersigned, a Registered Professional Land Surveyor licensed under the laws of the State of California do hereby state that the information, measurements, easements, record boundary lines, bearings and distances as shown hereon are based upon a field survey as dated above and upon items of public record and data contained in a title report, as referenced. Furthermore, the Latitude and Longitude coordinates are reported in NAD 83 Datum and are accurate to within ±15 feet horizontally, and the ground elevation, reported in NAVD 1988 Datum, is within ±3 feet vertically. The coordinate values and elevations are within the 1-A Accuracy Code designation as listed in the A.S.A.C. Information Sheet 91:003 and are accurate to the best of my knowledge and belief.

SIGNATURE — DATE 7/29/19

LEGEND

APN:	ASSESSOR'S PARCEL NUMBER		ASPHALT
CP	CONTROL POINT		CONCRETE
EL.	ELEVATION		CONTROL POINT
FH	FIRE HYDRANT		FOUND MONUMENT
FND.	FOUND		GPS POINT
HT.	HEIGHT	P 15.3 / R 12.3	PARAPET/ROOF ELEVATIONS
MON.	MONUMENT	× 12.3	SPOT ELEVATION
(M-M)	MONUMENT TO MONUMENT		TEMPORARY BENCHMARK
P.O.B.	POINT OF BEGINNING		
P.O.C.	POINT OF COMMENCEMENT		
PP	POWER POLE		
(TYP.)	TYPICAL		

DATE:	JULY 29, 2019
DRAWN BY:	MAS
FILE NO.:	PDND1801

REVISIONS

DATE	DESCRIPTION	INITIAL
02/05/18	90% ISSUE	MAS
09/21/18	100% COMPLETE	MAS
10/15/18	REVISED LEASES & EASEMENTS	MAS
10/25/18	CLIENT REDLINES	RO
3/19/19	REVISED LEASES & EASEMENTS	RO
6/7/19	REVISED LEASES & EASEMENTS	RO
7/12/19	ADD (P) 12" REC. WATER LINE	RO
7/29/19	REVISE LEASE AREA	RO

QUIET RIVER
Land Services Inc.
6747 Sierra Court, Suite K
Dublin, CA 94568
(925) 734-6788 Phone

EXISTING SITE CONDITIONS

LICENSED LAND SURVEYOR
KEVIN M. McGUIRE
Exp. 12-31-20
No. 6437
STATE OF CALIFORNIA

SF25XC335
EAGLE VINES GOLF COURSE

580 SOUTH KELLY ROAD
AMERICAN CANYON, CA 94503

C1
OF 1 SHEET

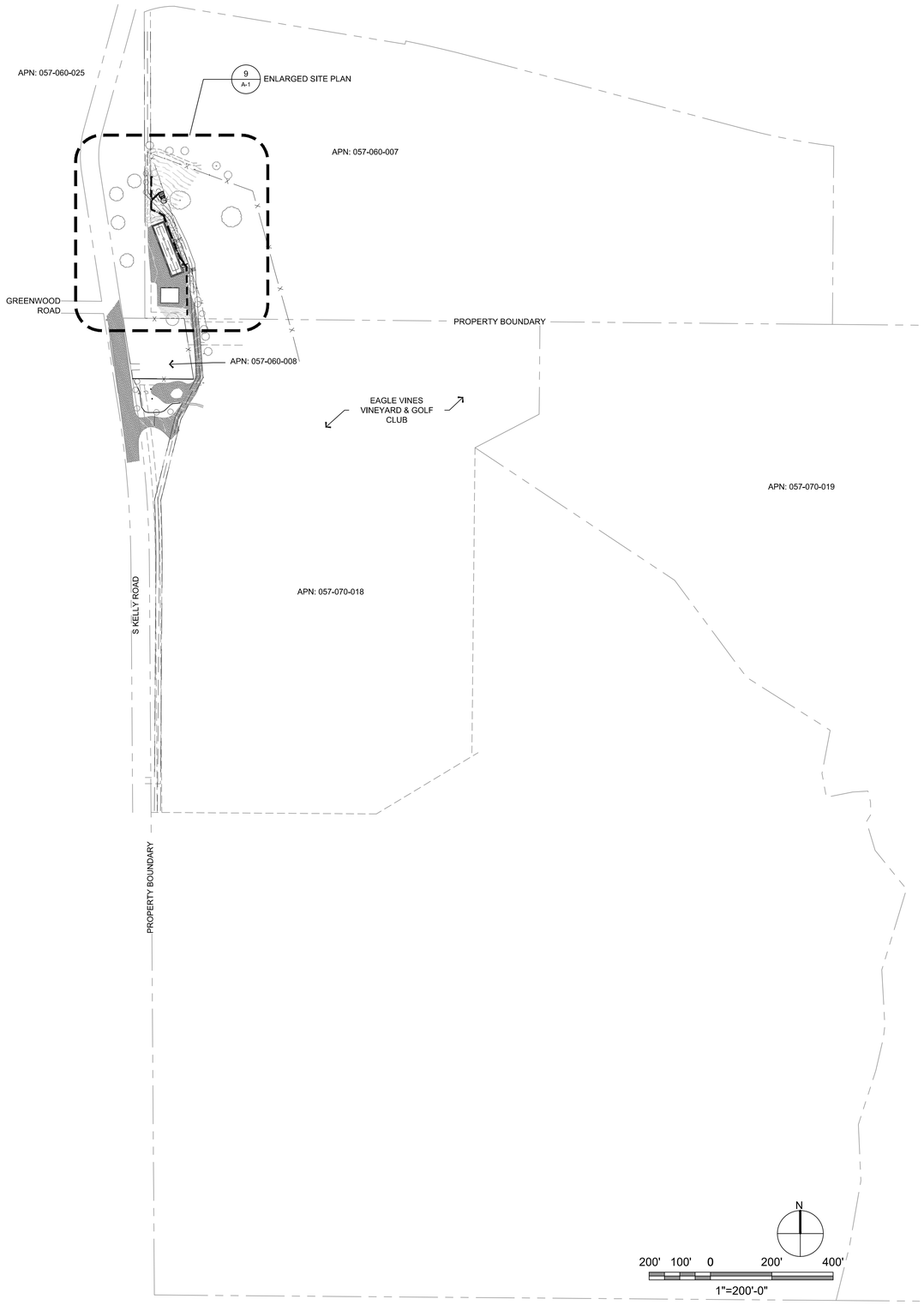

17 OVERALL SITE PLAN
1" = 200'-0"

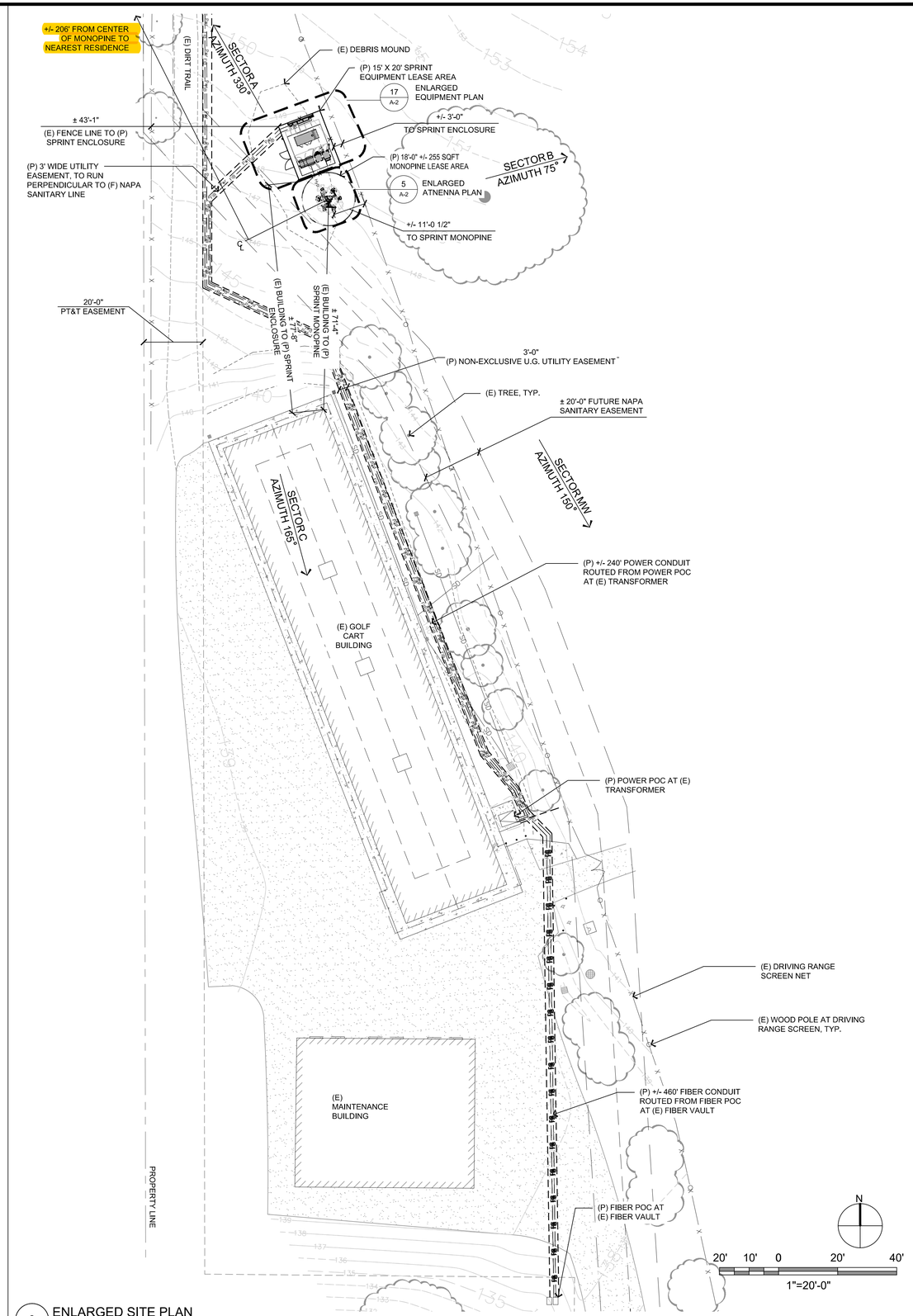

9 ENLARGED SITE PLAN
1" = 20'-0"

PREPARED FOR

Sprint

12657 Alcosta Blvd, Suite 300
San Ramon, California 94583

PRECISION

5098 Foothills Blvd 3-119
Roseville, CA 95747

Sprint Cascade:

SF25XC335-A

Architect:

ARCHITECTURE PLANNING INTERIORS

ARCHITECTURAL GROUP
Borges
1478 STONE POINT DRIVE
SUITE 350
ROSEVILLE CA 95661
Ty 916. 782 7200
Fx 916. 773 3037
BORGESARCH.COM

SPRINT CASCADE:	SF25XC335-A
PROJECT NO:	T-16503-1
DRAWN BY:	DAG
CHECKED BY:	JM

REV	DATE	DESCRIPTION
G	07/26/19	90% ZD REV 6
F	05/31/19	90% ZD REV 5
E	05/02/19	90% ZD REV 4
D	03/13/19	90% ZD REV 3
C	10/23/18	90% ZD REV 2
B	09/14/18	90% ZD REV 1
A	02/27/18	90% ZD SUBMITTAL

Licensor:

IT IS A VIOLATION OF LAW FOR ANY PERSON, UNLESS THEY ARE ACTING UNDER THE DIRECTION OF A LICENSED PROFESSIONAL ENGINEER, TO ALTER THIS DOCUMENT.

Issued For:

07/26/19

90% ZD Rev 6

SHEET TITLE:

OVERALL SITE PLAN

SHEET NUMBER:

A-1

Plot Date:7/31/2019 4:05:36 PM File Name:P:\2016\T-16503_Precision Site Development LLC\SF25XC335-1\SF25XC335 Nepa Permit\Sheets\A-1 OVERALL SITE PLAN.dwg Plotted By:John McDonnell

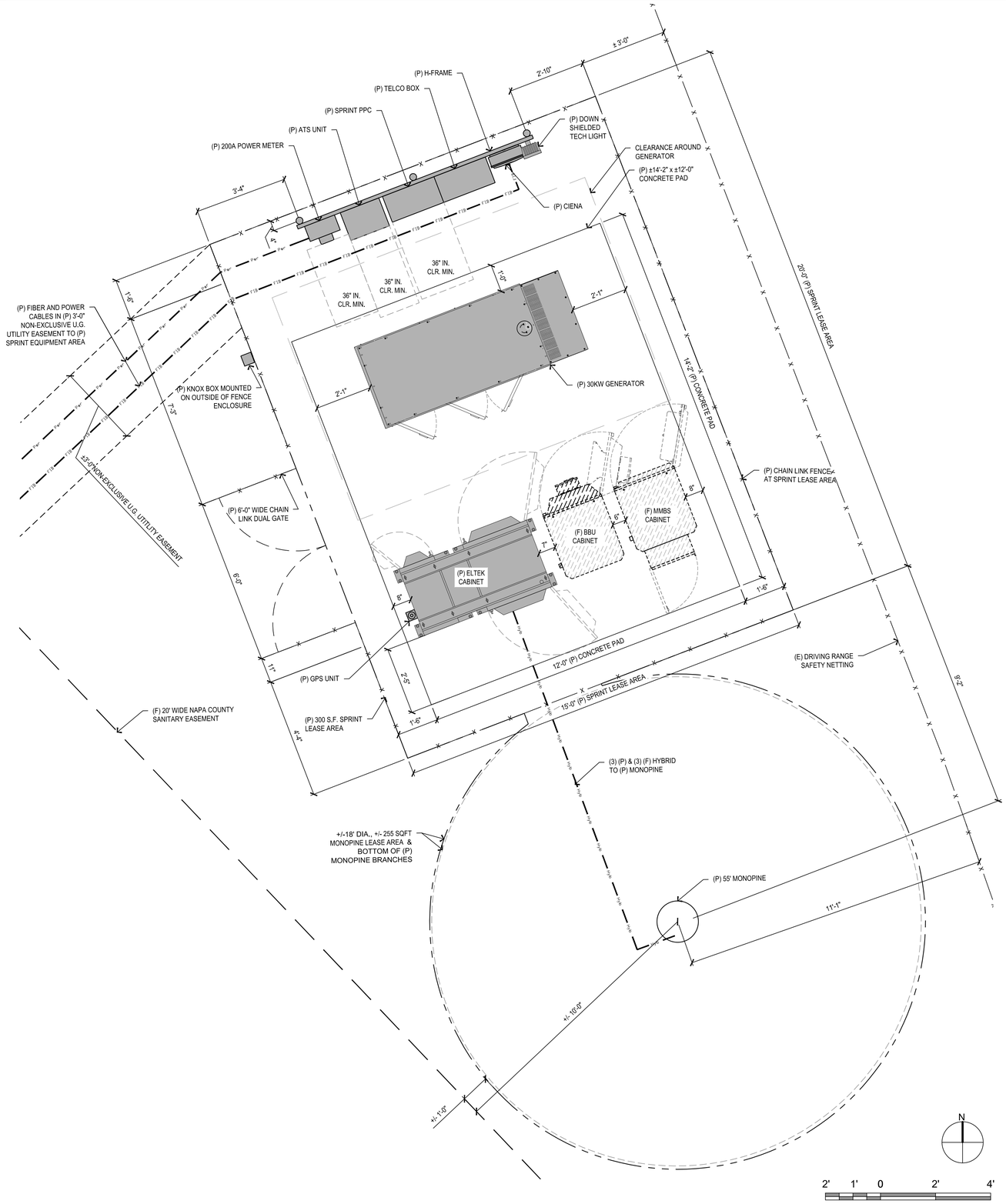

17 ENLARGED EQUIPMENT PLAN
1/2" = 1'-0"

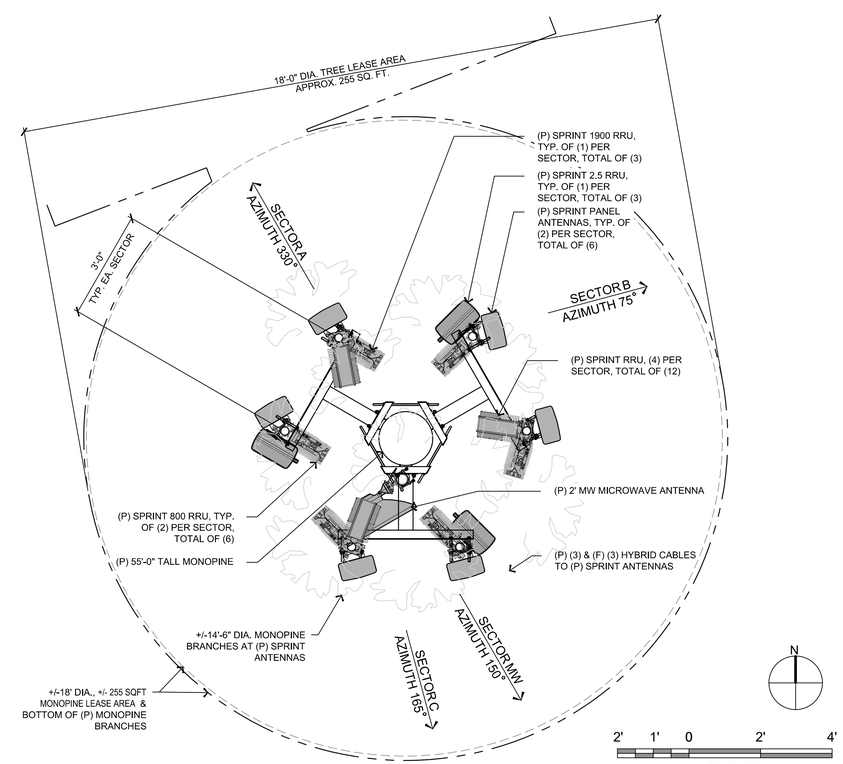

5 ENLARGED ANTENNA PLAN
1/2" = 1'-0"

PREPARED FOR

Sprint

12657 Alcosta Blvd, Suite 300
San Ramon, California 94583

PRECISION

5098 Foothills Blvd 3-119
Roseville, CA 95747

Sprint Cascade:

SF25XC335-A

Architect:

ARCHITECTURE PLANNING INTERIORS
ARCHITECTURAL GROUP Borges
1478 STONE POINT DRIVE
SUITE 350
ROSEVILLE CA 95661
T:916. 782.7200
F:916. 773.3037
BORGESARCH.COM

SPRINT CASCADE:	SF25XC335-A
PROJECT NO:	T-16503-1
DRAWN BY:	DAG
CHECKED BY:	JM

REV	DATE	DESCRIPTION
G	07/26/19	90% ZD REV 6
F	05/31/19	90% ZD REV 5
E	05/02/19	90% ZD REV 4
D	03/13/19	90% ZD REV 3
C	10/23/18	90% ZD REV 2
B	09/14/18	90% ZD REV 1
A	02/27/18	90% ZD SUBMITTAL

Licensor:

IT IS A VIOLATION OF LAW FOR ANY PERSON, UNLESS THEY ARE ACTING UNDER THE DIRECTION OF A LICENSED PROFESSIONAL ENGINEER, TO ALTER THIS DOCUMENT.

Issued For:

07/26/19

90% ZD Rev 6

SHEET TITLE:

ENLARGED EQUIPMENT PLANS

SHEET NUMBER:

A-2

Plot Date: 7/26/2019 11:19:06 AM File Name: T:\2016\T-16503_Precision Site Development LLC\SF25XC335-1\SF25XC335 Napa Permit\Sheets\A-2 Enlarged Equipment Plans.dwg Plotted By: John McDonnell

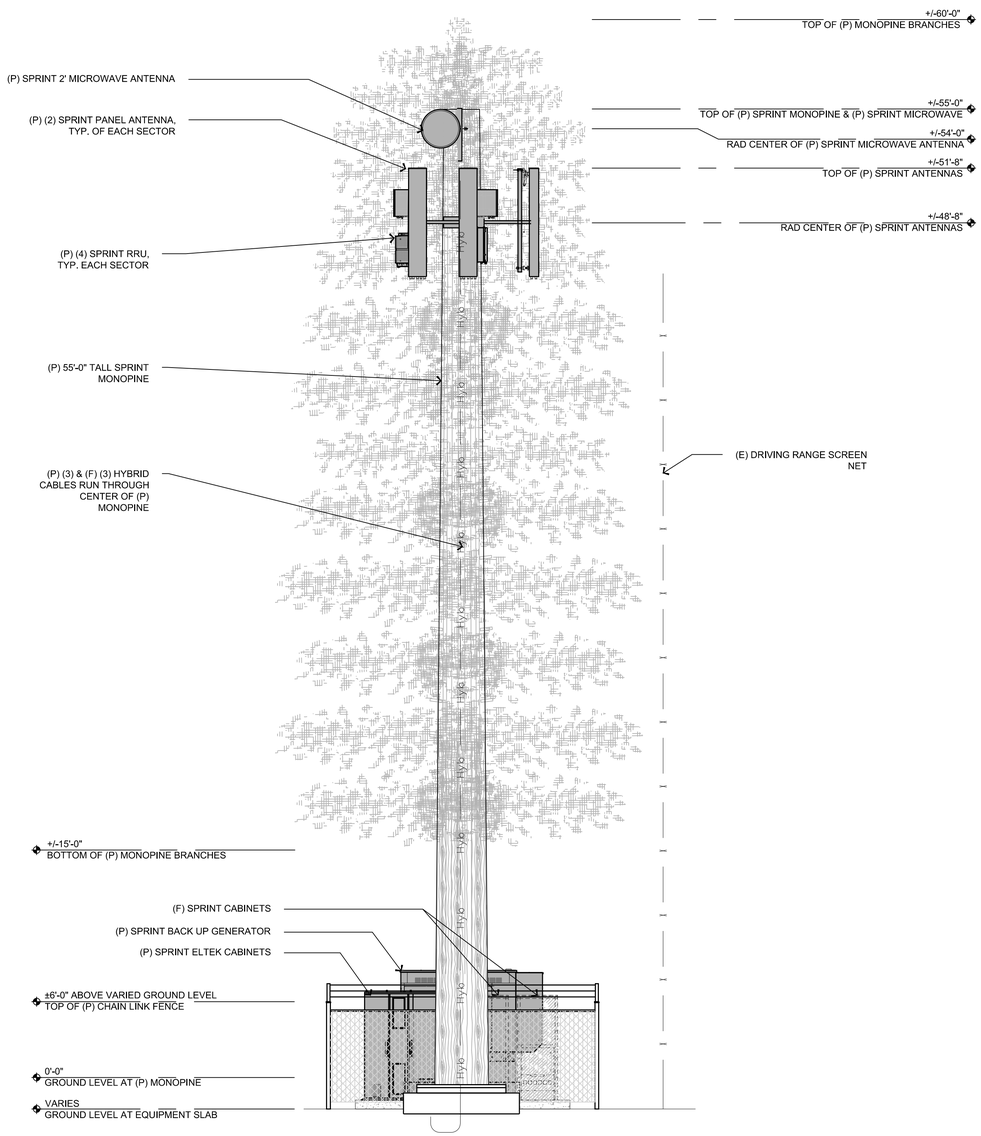

9 SOUTH ELEVATION
1/4" = 1'-0"

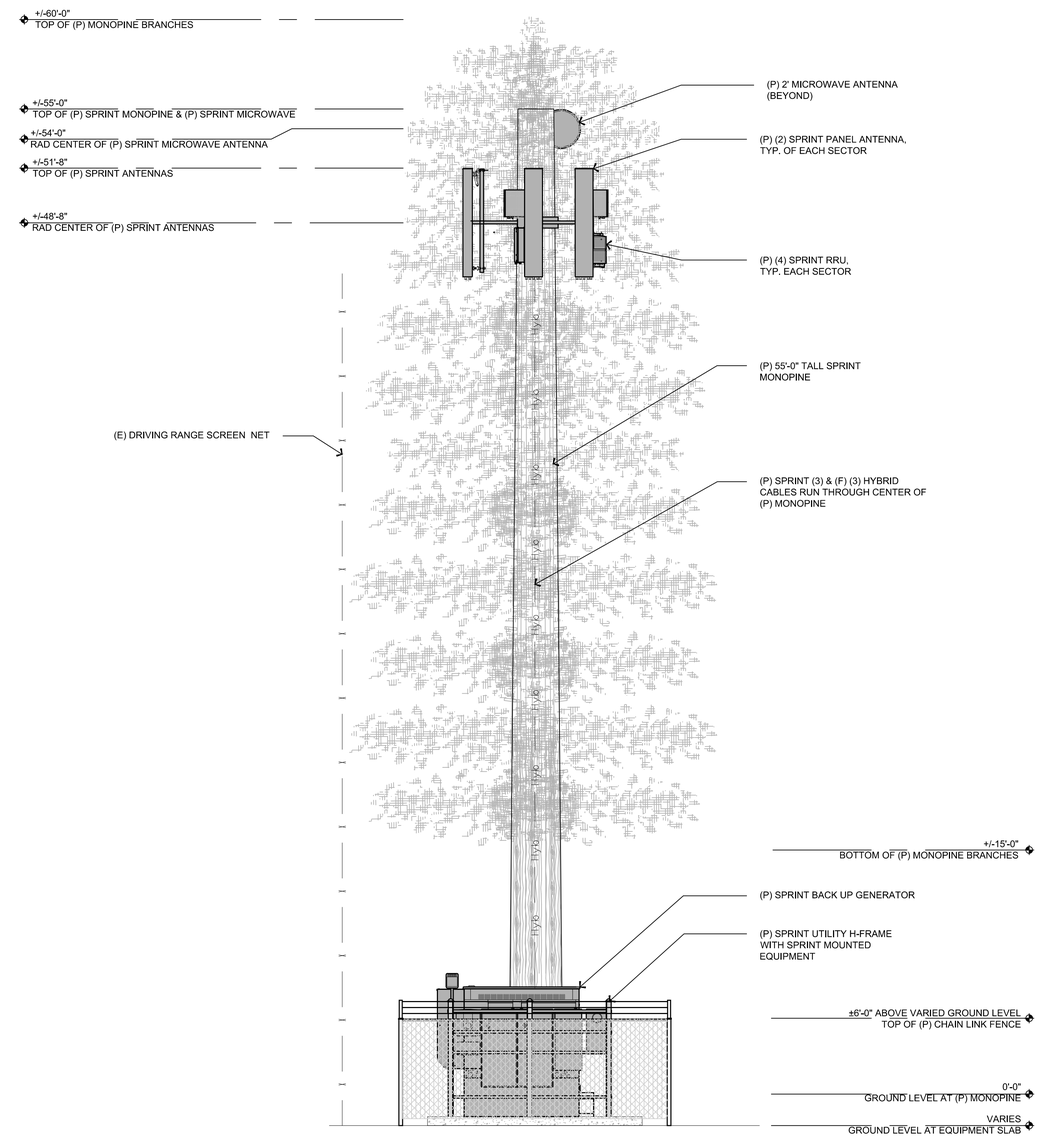

17 NORTH ELEVATION
1/4" = 1'-0"

PREPARED FOR

Sprint

12657 Alcosta Blvd, Suite 300
San Ramon, California 94583

PRECISION

5098 Foothills Blvd 3-119
Roseville, CA 95747

Sprint Cascade:

SF25XC335-A

Architect:

ARCHITECTURE PLANNING INTERIORS
ARCHITECTURAL GROUP Borges
1478 STONE POINT DRIVE
SUITE 350
ROSEVILLE CA 95661
T:916. 782.7700
F:916. 773.3037
BORGESARCH.COM

SPRINT CASCADE:	SF25XC335-A
PROJECT NO:	T-16503-1
DRAWN BY:	DAG
CHECKED BY:	JM

REV	DATE	DESCRIPTION
G	07/26/19	90% ZD REV 6
F	05/31/19	90% ZD REV 5
E	05/02/19	90% ZD REV 4
D	03/13/19	90% ZD REV 3
C	10/23/18	90% ZD REV 2
B	09/14/18	90% ZD REV 1
A	02/27/18	90% ZD SUBMITTAL

Licensor:

IT IS A VIOLATION OF LAW FOR ANY PERSON, UNLESS THEY ARE ACTING UNDER THE DIRECTION OF A LICENSED PROFESSIONAL ENGINEER, TO ALTER THIS DOCUMENT.

Issued For:

07/26/19

90% ZD Rev 6

SHEET TITLE:

EXTERIOR SITE ELEVATIONS

SHEET NUMBER:

A-3.1

Plot Date: 7/26/2019 4:55:56 PM File Name: T-16503_Precision Site Development LLC\SF25XC335-10\SF25XC335-10\SF25XC335 Nsupt Prem\Sheets\A-3.1 E Exterior Site Elevations.dwg Plotted By:David Gomez

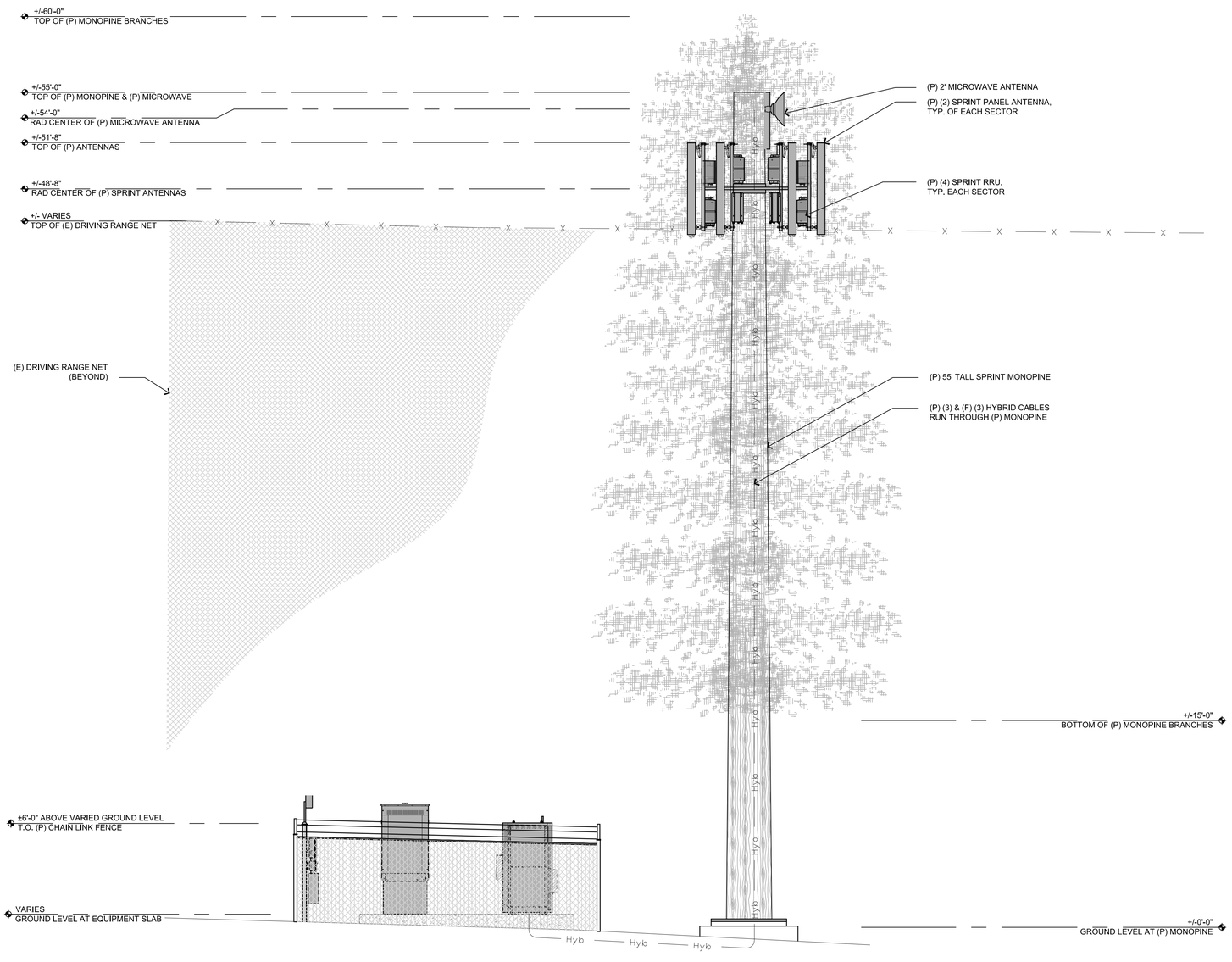

4' 2' 0 4' 8'

1/4"=1'-0"

17 WEST ELEVATION

1/4" = 1'-0"

PREPARED FOR

Sprint

12657 Alcosta Blvd, Suite 300
San Ramon, California 94583

PRECISION

5098 Foothills Blvd 3-119
Roseville, CA 95747

Sprint Cascade:

SF25XC335-A

Architect:

ARCHITECTURE PLANNING INTERIORS

ARCHITECTURAL GROUP Borges

1478 STONE POINT DRIVE
SUITE 350
ROSEVILLE CA 95661
T:916. 782.7200
F:916. 773.3037
BORGESARCH.COM

SPRINT CASCADE:	SF25XC335-A
PROJECT NO:	T-16503-1
DRAWN BY:	DAG
CHECKED BY:	JM

REV	DATE	DESCRIPTION
G	07/26/19	90% ZD REV 6
F	05/31/19	90% ZD REV 5
E	05/02/19	90% ZD REV 4
D	03/13/19	90% ZD REV 3
C	10/23/18	90% ZD REV 2
B	09/14/18	90% ZD REV 1
A	02/27/18	90% ZD SUBMITTAL

Licensor:

IT IS A VIOLATION OF LAW FOR ANY PERSON, UNLESS THEY ARE ACTING UNDER THE DIRECTION OF A LICENSED PROFESSIONAL ENGINEER, TO ALTER THIS DOCUMENT.

Issued For:

07/26/19

90% ZD Rev 6

SHEET TITLE:

EXTERIOR SITE ELEVATIONS

SHEET NUMBER:

A-3.2

Plot Date: 7/26/2019 4:19:50 PM File Name:P:\2016\T-16503_Precision Site Development LLC\SF25XC335-1\SF25XC335 Napa Premi\Sheets\A-3.2 Exterior Site Elevations.dwg Plotted By:David Gomez

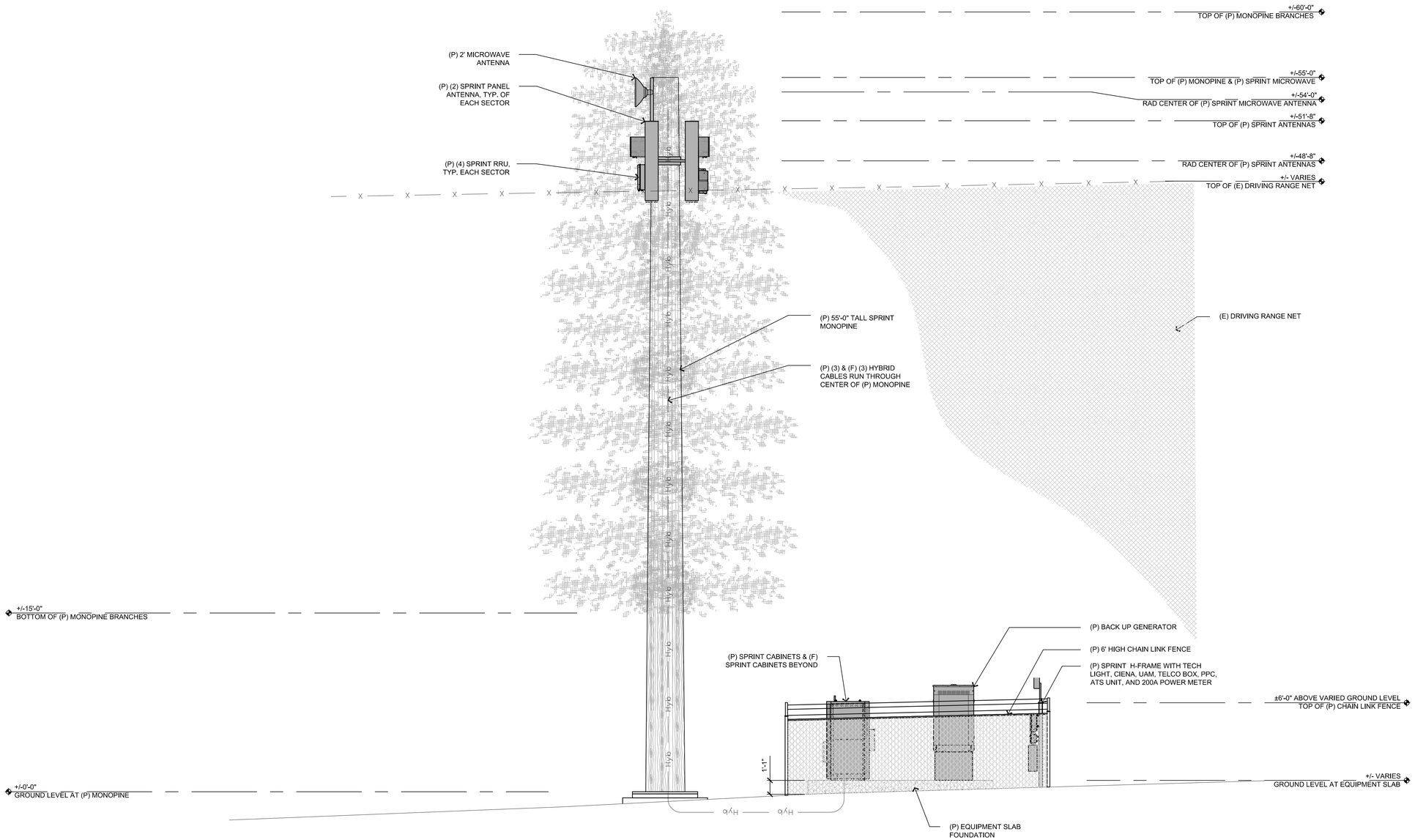

17 EAST ELEVATION
1/4" = 1'-0"

PREPARED FOR

Sprint

12657 Alcosta Blvd, Suite 300
San Ramon, California 94583

PRECISION

5098 Foothills Blvd 3-119
Roseville, CA 95747

Sprint Cascade:

SF25XC335-A

Architect:

ARCHITECTURE PLANNING INTERIORS
ARCHITECTURAL GROUP Borges
1478 STONE POINT DRIVE
SUITE 350
ROSEVILLE CA 95661
T:916.782.7200
F:916.773.3037
BORGESARCH.COM

SPRINT CASCADE:	SF25XC335-A
PROJECT NO:	T-16503-1
DRAWN BY:	DAG
CHECKED BY:	JM

REV	DATE	DESCRIPTION
G	07/26/19	90% ZD REV 6
F	05/31/19	90% ZD REV 5
E	05/02/19	90% ZD REV 4
D	03/13/19	90% ZD REV 3
C	10/23/18	90% ZD REV 2
B	09/14/18	90% ZD REV 1
A	02/27/18	90% ZD SUBMITTAL

Licensor:

IT IS A VIOLATION OF LAW FOR ANY PERSON, UNLESS THEY ARE ACTING UNDER THE DIRECTION OF A LICENSED PROFESSIONAL ENGINEER, TO ALTER THIS DOCUMENT.

Issued For:

07/26/19

90% ZD Rev 6

SHEET TITLE:

EXTERIOR SITE ELEVATIONS

SHEET NUMBER:

A-3.3

Plot Date: 7/26/2019 4:20:10 PM File Name:T:\2016\T-16503_Precision Site Development LLC\SF25XC335\SF25XC335 Nsupt Permit\Sheets\A-3.3 Exterior Site Elevations.dwg Plotted By:David Gomez

Technical Data Sheet **SC2-220BIPN**

CompactLine Easy Antenna, Ultra High Performance, Single Polarized, 2 ft

Product Description

RFS CompactLine® and CompactLine® Easy Antennas are designed for short-haul microwave systems in all common frequency ranges from 6 GHz to 86 GHz. They are typically deployed in dense urban areas, metropolitan and suburban locations, aggregation points. They are especially optimized to integrated radios to reduce costs, installation complexity and time.

Antenna

Features/Benefits

- Sizes ranging from 0.3 m (1 ft) to 1.8 m (6 ft)
- Frequencies ranging from 5.925 GHz to 86 GHz with support for four wideband frequency ranges (5.925-7.125, 7.125-8.5 ,10.0-11.7, and 71.0-86.0 GHz) to reduce antenna requirements and simplify logistics
- Single (SB and SC) and dual-polarized (SBX and SCX) models with the ability to upgrade from single to dual polarization and change frequencies in the field
- Low-profile design to reduce transportation requirements, wind load and antenna weight
- Simplified mounting design to accelerate installation
- CompactLine EASY models are extra light and easy to transport, deploy and upgrade
- Hardcover radomes
- Tested and validated ultra-high (ETSI EN 302 217-4-2 Class 3, FCC Class A) electrical performance
- Support for winds up to 250 km/h (155 mph) and even 320 km/h (195 mph) for SB1/SBX1
- An optional sway bar for antennas 1 m (3 ft) and larger is available

Technical Features

Product Type	Point to point antennas
Frequency, GHz	21.2 - 23.6
Diameter, ft (m)	2 (0.6)
Profile	CompactLineEasy
Reflector	1-part
Swaybar	0: (not applicable)
optional Swaybar	0: (not applicable)
Performance	Ultra High
Polarization	Single
Regulatory Compliance	ETSI EN 302217 Range 3 Class 3 , FCC Category A , SRSP 321.8 Part A
3dB beamwidth, (degrees)	1.5
Antenna Input	Customized
Low Band Gain, dBi	40.5
Mid Band Gain, dBi	41
High Band Gain, dBi	41.5
F/B Ratio, dB	66
XPD, dB	30
Max VSWR / R L, dB	1.29 (18)
Elevation Adjustment, degrees	± 20
Azimuth Adjustment, degrees	± 15
Polarization Adjustment, degrees	± 5
Radome	Rigid
Antenna color	White RAL 9010
Mounting Pipe Diameter minimum, mm (in)	48 (1.9)
Mounting Pipe Diameter maximum, mm (in)	114 (4.5)
Approximate Weight, kg (lb)	9 (20)
Survival Windspeed, km/h (mph)	252 (155)
Operational Windspeed, km/h (mph)	180 (112)

All information contained in the present datasheet is subject to confirmation at time of ordering

Technical Data Sheet **SC2-220BIPN (Cont.)**

CompactLine Easy Antenna, Ultra High Performance, Single Polarized, 2 ft

All values @ Survival Wind Speed

F_{ST} Side force max, N (lb)	613 (138)
F_{AT} Fa Axial force max, N (lb)	1238 (276)
M Torque max., Nm (lb*ft)	420 (94)

Dimensions	mm (in)
ØA	670 (26.4)
B	296 (11.7)
C	238 (9.4)
D @ Mounting pipe Ø 219 (8.5):	not applicable
D @ Mounting pipe Ø 114 (4.5):	326 (12.8)
D @ Mounting pipe Ø 89 (3.5):	313.5 (12.3)
D @ Mounting pipe Ø 48 (1.9):	293 (11.5)
E	49 (1.9)
F	212 (8.3)
G	not applicable
H	not applicable

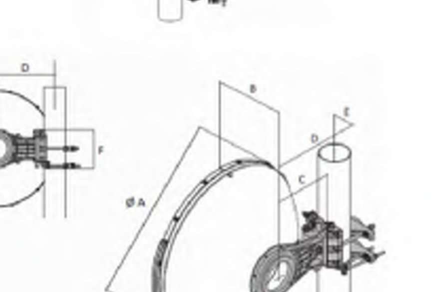

Notes

no notes

Documentation

RPE (IQ-Link format)
RPE (Pathloss format)
RPE (PDF format)

All information contained in the present datasheet is subject to confirmation at time of ordering

FibeAir® IP-20C

Compact All-Outdoor Multi-Core Node

FibeAir IP-20C sets a new standard in microwave transmission combining multi-core radio technology and LoS 4X4 MIMO for ultra-high capacity along with a rich set of Carrier Ethernet advanced services. Compact, all-outdoor design allows deployment anywhere while remote upgradability protects investment.

FibeAir IP-20C breaks capacity barriers offering a virtual fiber solution in licensed 6-38 GHz frequencies - 1Gbps in a box. Its versatility makes it ideal for a wide variety of cost-effective deployment scenarios including macrocell backhaul, small-cell aggregation and multi-carrier trunks. As a software-defined radio, it can be remotely configured to quadruple capacity, double link distance and reduce power consumption ensuring long-term, cost-efficient operation as needs change. It is easily and quickly deployable compared with fiber, allowing operators to achieve much faster time to new revenue streams, lower total cost of ownership and long-term peace of mind.

FibeAir IP-20C is future-proof, ready for upgrade from 1+0 to 2+0, doubling the capacity, from day one. Activating the second transceiver is accomplished remotely without a site visit. A complete solution, it offers a rich set of Carrier Ethernet advanced services, providing a wide range of new capabilities that address the diverse needs of mobile operators, ISPs, utilities, large enterprises and private networks.

FibeAir IP-20C's unique multi-core architecture is based on an advanced parallel radio processing engine built around Ceragon's in-house baseband modem and RFIC chipsets. The result is superior radio performance with reduced power consumption and form-factor. It can be deployed either as an all-outdoor node or as a multi-core radio unit in a split-mount configuration with another IP-20 platform indoor node.

Compact All-Outdoor Multi-Core Node

- Multi-core radio solution delivering multi-Gbps anywhere

Remote activation of the 2nd TRX - future upgrades without additional site visits

- Multi-gigabits radio capacity with high spectral efficiency

Virtual fiber in licensed frequencies – 1Gbps in a box

LoS 4X4 MIMO and up to 2048 QAM modulation

- High service granularity enables rollout of new business models

Intelligent service-centric management utilizing Hierarchical QoS and advanced OAM capabilities

Integrated Ethernet switch, MEF Carrier Ethernet 2.0-compliant and MPLS-TP-ready

- Common OS & software-defined engine simplify network modernization

Unified CeraOS across entire IP-20 platform

Powered by programmable network processor

CERAGON

The OMT weighs 7.7 lbs..

Radio

Supported Frequency Range
- 6-38 GHz

Configurations
- 1+0 to 4+0, 1+1/2+2, E/W

Radio Features
- Multi-Carrier Adaptive Bandwidth Control (up to 2+0)
- Protection: 1+1/2+2 HSB
- High spectral utilization: QPSK to 2048 QAM w/ACM
- XPIC
- 2x2 / 4x4 LoS MIMO

Ethernet

Ethernet Interfaces
- Traffic Interfaces – 1 x 10/100/1000Base-T (RJ-45) and 2x1000base-X (Optical SFP) or 10/100/1000Base-T (Electrical SFP)
- Management Interface - 1 x 10/100 Base-T (RJ-45)
- SFP Types - Optical 1000Base-LX (1310 nm) or SX (850 nm)

Note: SFP devices must be of industrial grade (-40°C to +85°C)

Ethernet Features
- MTU – 9600 Bytes
- Quality of Service
  - Multiple Classification criteria (VLAN ID, p-bits, IPv4 DSCP, IPv6 TC, MPLS EXP)
  - 8 priority queues
  - Deep buffering (configurable up to 64 Mbit per queue)
  - WRED
  - Hierarchical QoS – high service granularity *
  - P-bit marking/remarking
- 4K VLANs
- VLAN add/remove/translate
- Frame Cut Through – controlled latency and PDV for delay sensitive applications
- Header DeDuplication – Capacity boosting by eliminating inefficiency in all layers (L2,MPLS, L3,L4, Tunneling – GTP for LTE, GRE)
- Ethernet OAM – EFM (IEEE 802.3ah), CFM (IEEE 802.1ag), ITU-T Y.1731*

Synchronization

Synchronization Distribution
- Sync Distribution over any traffic interface (GE/FE)
- SyncE (ITU-T G.8261, G.8262)
- SSM/ESMC Support for ring/mesh applications (ITU-T G.8264)
- SyncE Regenerator mode, providing PRC grade (ITU-T G.811) performance for smart pipe applications.

IEEE-1588
- Optimized Transport for reduced PDV
- IEEE-1588 TC*

Standards

MEF
- Carrier Ethernet 2.0 (CE 2.0)**

Supported Ethernet Standards
- 10/100/1000base-T/X (IEEE 802.3)
- Ethernet VLANs (IEEE 802.3ac)
- Virtual LAN (VLAN, IEEE 802.1Q)
- Class of service (IEEE 802.1p)
- Provider bridges (QinQ – IEEE 802.1ad)
- Link aggregation (IEEE 802.3ad)
- Auto MDI/MDIX for 1000baseT
- RFC 1349: IPv4 TOS
- RFC 2474: IPv4 DSCP
- RFC 2460: IPv6 Traffic Classes

Standards Compliance
- EMC: EN 301 489-1, EN 301 489-4, Class B (Europe), FCC 47 CFR, part 15, class B (US), ICES-003, Class B (Canada), TEC/EMI/TEL-001/01, Class B (India)
- Surge: EN61000-4-5, Class 4 (for PWR and ETH1/PoE ports)
- Safety: EN 60950-1, IEC 60950-1, UL 60950-1, CSA-C22.2 No.60950-1, EN 60950-22, UL 60950-22, CSA C22.2.60950-22
- Storage: ETSI EN 300 019-1-1 Class 1.2
- Transportation: ETSI EN 300 019-1-2 Class 2.3

Technical Specifications

Mechanical Specifications
- Dimensions – 9.05"(H), 9.07"(W), 3.86"(D), 14.33 lbs.
- Pole Diameter Range (for Remote Mount Installation) – 3.5" – 4.5"

Environmental Specifications
- -27°F to +131°F (-49°F to +140°F extended)

Power Input Specifications
- Standard Input: -48 VDC
- DC Input range: -40 to -60 VDC

Power Consumption Specifications
- Maximum Power Consumption (Multi-Core Operation) –6 GHz: 65W; 7-8 GHz: 75W; 11 GHz: 65W; 13-15 GHz: 55W; 18-24 GHz: 48W; 26-42 GHz: 55W
- Maximum Power Consumption (1+0 Operation) –6 GHz: 40W; 7-8 GHz: 50W; 11 GHz: 53W; 13-15 GHz: 41W; 18-24 GHz: 39W; 26-42 GHz: 41W

PoE Injector Mechanical Specifications
- Dimensions – 5.28"(H), 7.48"(W), 2.44"(D), 2.2 lbs.

PoE Injector Environmental Specifications
- -27°F to +131°F (-49°F to +140°F extended)

PoE Injector Power Input Specifications
- Standard Input: -48 or +24 VDC (Optional)
- DC Input range: ±(18/40.5 to 60) VDC (+18VDC extended range is supported as part of the nominal +24VDC support)

PoE Injector Interfaces
- GbE Data Port supporting 10/100/1000Base-T
- Power-Over-Ethernet (PoE) Port
- DC Power Port –40V to -60V (a PoE supporting two redundant DC feeds each supporting ±(18-60)V is available)

* Planned for future release.

** Certification pending.

RFS SC2-220BIPN

DIAMETER, NOMINAL:	0.6m (2ft)
NET WEIGHT:	9kg (20lb)

ANTENNA FINE ADJUSTMENT

FINE AZIMUTH	±15°
FINE ELEVATION	±20°

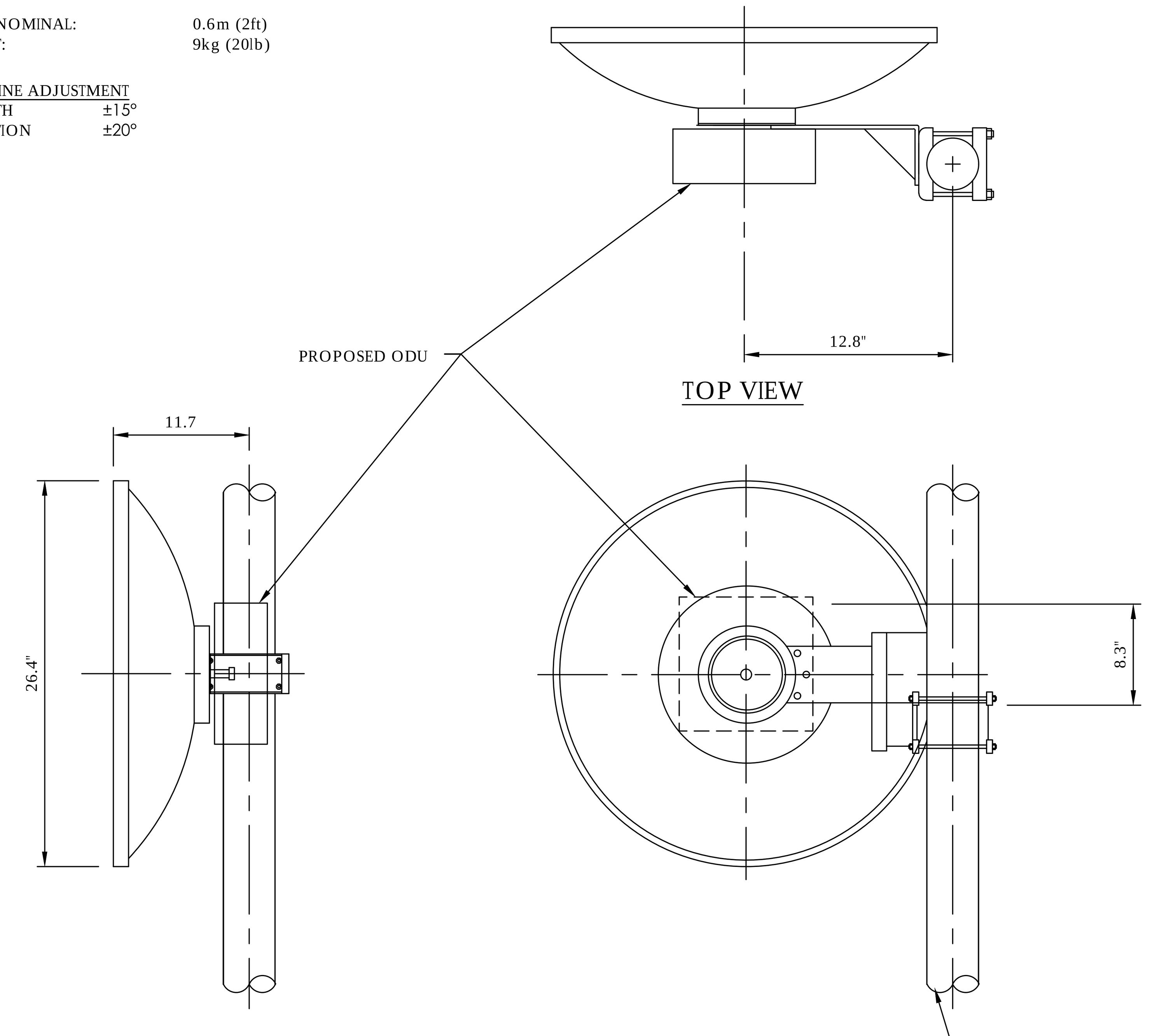

ELECTRICAL SPECIFICATIONS	
FREQUENCY BAND, GHz	21.2-23.6
BOTTOM BAND GAIN, dBi	40.5
MID BAND GAIN, dBi	41
TOP BAND GAIN, dBi	41.5
BEAMWIDTH, DEGREES	1.5
FRONT/BACK dB	66
XPD, dB	30
RETURN LOSS, dB	18

5 MICROWAVE DETAIL
1' = 1'-0"
rename me to this view "dwg" name

PREPARED FOR

Sprint

12657 Alcosta Blvd, Suite 300
San Ramon, California 94583

PRECISION SITE DEVELOPMENT
5098 Foothills Blvd 3-119
Roseville, CA 95747

Sprint Cascade:

SF25XC335-A

Architect:
ARCHITECTURE PLANNING INTERIORS
Borges ARCHITECTURAL GROUP
1478 STONE POINT DRIVE SUITE 350 ROSEVILLE CA 95661
T 916 782 7200
F 916 773 3037
BORGESARCH.COM

SPRINT CASCADE:	SF25XC335-A
PROJECT NO:	T-16503-1
DRAWN BY:	DAG
CHECKED BY:	JM

REV	DATE	DESCRIPTION
G	07/26/19	90% ZD REV 6
F	05/31/19	90% ZD REV 5
E	05/02/19	90% ZD REV 4
D	03/13/19	90% ZD REV 3
C	10/23/18	90% ZD REV 2
B	09/14/18	90% ZD REV 1
A	02/27/18	90% ZD SUBMITTAL

Licensor:

IT IS A VIOLATION OF LAW FOR ANY PERSON, UNLESS THEY ARE ACTING UNDER THE DIRECTION OF A LICENSED PROFESSIONAL ENGINEER, TO ALTER THIS DOCUMENT.

Issued For:

07/26/19

90% ZD Rev 6

SHEET TITLE:

MICROWAVE SPECIFICATIONS

SHEET NUMBER:

A-□□1

Plot Date:7/26/2019 4:20:16 PM File Name:T:\2016\T-16503_Precision Site Development LLC\SF25XC335-1\SF25XC335 Napa Perm\Sheets\A-4.1 Microwave Specifications.dwg Plotted By:David Gome□

stored energy solutions for a demanding world

Narada

Model: 12NDT190

Acme

The Acme T range of front access VRLA batteries has been specifically designed for applications using 19" and 23" cabinets, especially telecoms. Reliability is assured with the patented post seal and a state-of-the-art design developed to comply with the latest IEC, British and Telcordia standards. A 12+ years design life and centralised venting system add to the suitability and flexibility of this superior range.

Dimensions-mm[inch]

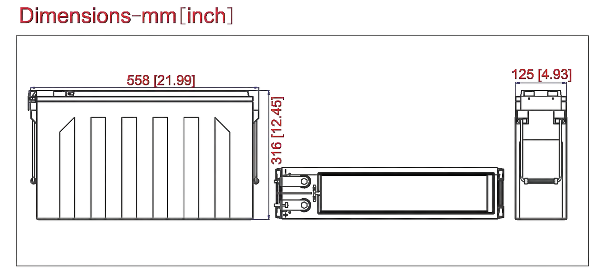

Specifications

Battery Model	12NDT190
Nominal Voltage	12V
Rated Capacity	190Ah (10 hour rate) to 1.80V/cell @25°C(77°F)
Typical Weight	60.5kg
Internal Resistance	Approx 3.98mΩ
Temperature Ranges	Operation (maximum): -40°C to 50°C(-40°F to 122°F) Operation (recommended): 15°C to 25°C(59°F to 77°F) Storage: -20°C to 40°C(-4°F to 104°F)
Float Voltage	2.25V/cell@25°C(77°F)
Recommended Maximum Charging Current Limit	47.5A
Equalize and Cycle Service	2.35V~2.40V/cell@25°C(77°F)
Self Discharge	The residual capacity is above 90% after 90 days storage(25°C/77°F)
Terminal	M6 Female
Terminal Hardware Torque	8 ± 1. 0Nm
Container Material	ABS (V0 optional)

Constant Current Discharge Characteristics Units: Amperes (25°C, 77°F)

End voltage per cell	5MIN	15MIN	30MIN	45MIN	1HR	2HR	3HR	4HR	5HR	6HR	8HR	10HR	12HR	20HR	24HR
1.60V	532	334	220	162	132	76.4	54.2	42.8	36.3	30.7	24.3	19.5	16.8	10.5	8.72
1.67V	498	328	216	161	131	75.7	53.9	42.7	36.1	30.4	24.1	19.4	16.7	10.4	8.64
1.70V	480	322	213	160	130	75.4	53.7	42.6	36.0	30.3	24.0	19.3	16.6	10.3	8.60
1.75V	456	308	205	157	129	74.7	53.4	42.4	35.8	30.0	23.8	19.1	16.5	10.2	8.53
1.80V	410	283	193	150	125	73.2	52.6	42.0	35.2	29.5	23.6	19.0	16.4	10.2	8.49
1.83V	374	265	184	144	122	71.3	51.6	41.5	34.4	28.7	23.3	18.9	16.3	10.1	8.44
1.85V	355	252	179	138	119	69.4	50.7	41.0	33.9	28.4	23.0	18.8	16.2	10.1	8.39

Discharge Data with Constant Power Units: Watts per cell (25°C, 77°F)

End voltage per cell	5MIN	15MIN	30MIN	45MIN	1HR	2HR	3HR	4HR	5HR	6HR	8HR	10HR	12HR	20HR	24HR
1.60V	928	616	395	317	269	159	113	88.1	74.2	63.1	48.5	41.6	36.0	22.1	18.4
1.67V	877	600	392	315	268	159	113	87.8	73.9	62.9	48.3	41.5	35.9	21.9	18.3
1.70V	846	588	389	314	267	158	112	87.6	73.6	62.8	48.2	41.5	35.8	21.7	18.3
1.75V	781	566	382	309	263	157	112	87.1	73.1	62.5	47.9	41.4	35.7	21.5	18.2
1.80V	718	535	370	300	256	154	110	86.0	72.1	62.0	47.6	41.2	35.5	21.2	18.2
1.83V	697	507	359	291	249	150	108	85.0	71.0	61.3	47.4	40.9	35.3	21.0	18.1
1.85V	683	483	351	285	244	147	105	83.9	69.8	60.6	47.1	40.7	35.0	20.7	18.0

Copyright Narada Power Source Co., Ltd.

www.naradabattery.com

stored energy solutions for a demanding world

Narada

Model: 12NDT190

Acme

Terminal Voltage(V) Vs. Discharge Time (25°C, 77°F)

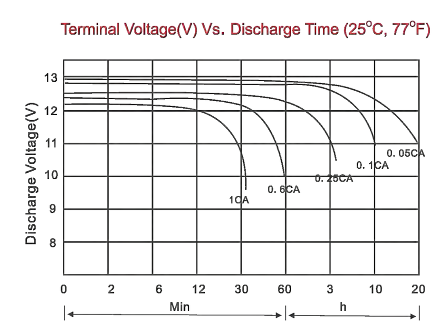

Battery Voltage Vs. Charge Time

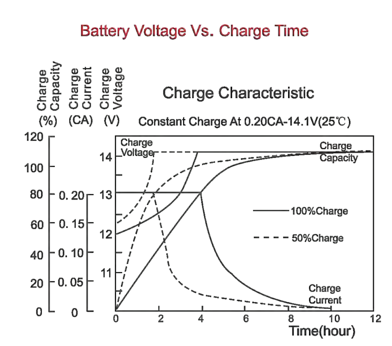

Relationship of OCV Vs. State of Charge

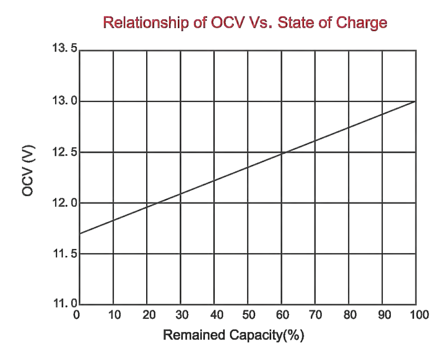

Capacity Retention Characteristic

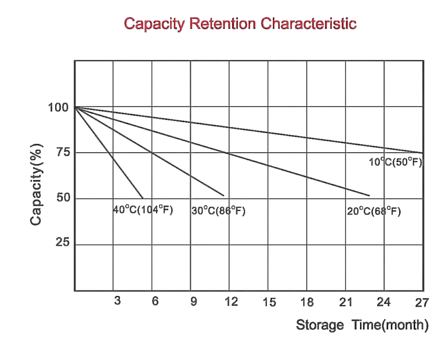

Charging Procedures

Application	Temperature	Charge Voltage (V/Cell) Set Point	Charge Voltage (V/Cell) Allowable Range	Max. Charge Current
Cycle	25°C	2.40	2.35~2.40	0. 25C
Standby	25°C	2.25	2.23~2.27	

Discharge Current VS. Discharge Voltage

Final Discharge Voltage V/Cell	1.80	1.70	1.55	1.30
Discharge Current (A)	0.2C≥(A)	0.2C<(A)<0.5C	0.5C<(A)<1.0C	(A)>1.0C

NARADA POWER SOURCE CO.,LTD.
9F, Building A, No. 50 Zijinghua Road, Hangzhou, China
Tel:+86-571-28827013 Fax:+86-571-28828290
Website:www.naradabattery.com E-mail: intl@narada.biz

NARADA ASIA PACIFIC PTE.LTD.
65 Ubi Crescent #07-05 Hola centre, Singapore
Tel: +65-6848 1191 Fax: +65-6749 3498
E-mail: sales@narada.com.sg

NARADA EUROPE (UK) LIMITED
Spectrum House, Dunstable Road, Redbourn,
St. Albans, Herts AL3 7PR
Tel: +44 (0)845 371 7095 Fax:+44 (0)845 612 2031
E-mail: sales@naradaeurope.com

Pb

12NDT190-03-N-EN (Ver.03 July 2012) Subject to revision without prior notice. E.& O.E.

Narada

MATERIAL SAFETY DATA SHEET

Jan. 20, 2015

SECTION 1: PRODUCTS AND MANUFACTURE

Product: Valve Regulated Lead Acid Battery (VRLA Battery)

Manufacturer:

NARADA POWER SOURCE CO., LTD.
72 Jingguan Road, Qingshan Town, Lin'an Economic Development Zone. Zhejiang, China 311305
Tel:(+86-571) 56975980 Fax:(+86-571) 56975955
Email: intl@narada.biz Website: www.naradabattery.com

Rroduct:
COMMERCIAL NAME
BATTERIES WITH ABSORBED ELECTROLYTE WET, NON-SPILLABLE
TECHNICAL NAME
BATTERIES CONTAINING A SOLUTION OF SULPHURIC ACID AND DISTILLED WATER, ABSORBED IN SEPARATORS

SECTION 2: HAZARDOUS COMPONENTS

COMPONENTS	%WEIGHT	TLV	LD50 ORAL	LC50 INHALATION	LC50 CONTACT
Lead (Pb, PbO_2, $PbSO_4$)	About 70%	-	(500) mg/Kg	-	-
Sulfuric Acid DILUTED SULPHURIC ACID – H_2SO_4	About 20%	1 mg/m³	(2.140) mg/Kg	-	-
Fiberglass Separator	About 5%	-	-	-	-
ABS or PP	About 5%	-	-	-	-

SECTION 3: PHYSICAL DATA

COMPONENTS	DENSITY	MELTING POINT	SOLLUBILITY (H_2O)	ODOR	APPEARANCE
Lead	11.34	327.4°C (Boiling)	None	None	Sliver-Gray Metal
Lead Sulfate	6.2	1070°C (Boiling)	40 mg/l (15°C)	None	White Powder
Lead Dioxide	9.4	290°C (Boiling)	None	None	Brown Powder
Sulfuric Acid	About 1.3	About 114°C (Boiling)	100%	Acidic	Clear Colorless Liquid
Fiberglass Sep.	-	-	SLIGHT	TOXIC	WHITE FIBROUS GLASS
ABS or PP	-	-	NONE	NO ODOR	SOLID

NARADA POWER SOURCE CO., LTD.
72 Jingguan Road, Qingshan Town, Lin'an Economic Development Zone. Zhejiang, China 311305
Tel:(+86-571) 56975980 Fax:(+86-571) 56975955
Email: intl@narada.biz Website: www.naradabattery.com

Narada

SECTION 4: PROTECTION

EXPOSURE	PROTECTION	COMMENTS
SKIN	Rubber gloves, Apron, Safety shoes	Protective equipment must be worn if battery is cracked or otherwise damaged.
RESPIRATORY	Respirator (for lead)	A respirator should be worn during reclaim operations if the TLV exceeded.
EYES	Safety goggles, Face Shield	

SECTION 5: FLAMMABILITY DATA

COMPONENTS	FLASHPOINT	EXPLOSIVE LIMITS	COMMENTS
Lead	None	None	
Sulfuric Acid	None	None	
Hydrogen	259℃	4% - 74.2%	Sealed batteries can emit hydrogen only if over charged (float voltage> 2.4 VPC). The gas enters the air through the vent caps. To avoid the chance of a fire or explosion, keep sparks and other sources of ignition away from the battery. Extinguishing Media: Dry chemical, foam, CO_2
Fiberglass Sep.	-	-	Toxic vapors may be released. In case of fire: wear self-contained breathing apparatus.
478 Polystyrene	None	-	Temperatures over 300 °C (572°F) may release combustible gases. In case of fire: wear positive pressure self-contained breathing apparatus.

SECTION 6: REACTIVITY DATA

COMPONENT	Lead/lead compounds
STABILITY	Stable
INCOMPATIBILITY	Potassium, carbides, sulfides, peroxides, phosphorus, sulfurs.
DECOMPOSITION PRODUCTS	Oxides of lead and sulfur.
CONDITIONS TO AVOID	High temperature, Sparks and other sources of ignition.
COMPONENT	Sulfuric Acid
STABILITY	Stable at all temperatures
POLYMERIZATION	Will not polymerize
INCOMPATIBILITY	Reactive metals, strong bases, most organic compounds
DECOMPOSITION	Sulfuric dioxide, trioxide, hydrogen sulfide, hydrogen

NARADA POWER SOURCE CO., LTD.
72 Jingguan Road, Qingshan Town, Lin'an Economic Development Zone. Zhejiang, China 311305
Tel:(+86-571) 56975980 Fax:(+86-571) 56975955
Email: intl@narada.biz Website: www.naradabattery.com

Narada

PRODUCTS	
CONDITIONS TO AVOID	Prohibit smoking, sparks, etc. from battery charging area. Avoid mixing acid with other chemicals.

SECTION 7: CONTROL MEASURES

1. Store lead/acid batteries with adequate ventilation. Room ventilation is required for batteries utilized for standby power generation. Never recharge batteries in an unventilated, enclosed space.
2. Do not remove vent caps. Follow shipping and handling instructions that are applicable to the battery type. To avoid damage to terminals and seals, do not double-stack industrial batteries.

STEPS TO TAKE IN CASE OF LEAKS OR SPILLS

If sulfuric acid is spilled from a battery, neutralize the acid with sodium bicarbonate (baking soda), sodium carbon (soda ash), or calcium oxide (lime).

Flush the area with water discard to the sewage systems. Do not allow unneutralized acid into the sewage system.

WASTE DISPOSAL METHOD:

Neutralized acid may be flushed down the sewer. Spent batteries must be treated as hazardous waste and disposed of according to local state, and federal regulations. A copy of this material safety data must be supplied to any scrap dealer or secondary smelter with battery.

ELECTRICAL SAFETY

Due to the battery's low internal resistance and high power density. High levels of short circuit can be developed across the battery terminals. Do not rest tools or cables on the battery. Use insulated tools only.

Follow all installation instruction and diagrams when installing or maintaining battery systems.

SECTION 8: HEALTH HAZARD DATA

LEAD: The toxic effects of lead are accumulative and slow to appear. It affects the kidneys, reproductive, and central nervous system.

The symptoms of lead overexposure are anemia, vomiting, headache, stomach pain (lead colic), dizziness, loss of appetite, and muscle and joint pain. Exposure to lead from a battery most often occurs during lead reclaim operations through the breathing or ingestion of lead dusts and fumes.

THIS DATA MUST BE PASSED TO ANY SCRAP OR SMELTER WHEN A BATTERY IS RESOLD.

SULFURIC ACID: Sulfuric acid is a strong corrosive. Contact with acid can cause severe burns on the skin and in the eyes. Ingestion of sulfuric acid will cause GI tract burns. Acid can be release if the battery case is damaged or if the vents are tampered with.

FIBERGLASS SEPARATOR: Fibrous glass is an irritant of the upper respiratory tract, skin and eyes. For exposure up to 10F/CC use MSA Comfort with type H filter. Above 10F/CC up to 50F/CC use Ultra-Twin with type H filter.

NTP or OSHA does not consider this product carcinogenic.

NARADA POWER SOURCE CO., LTD.
72 Jingguan Road, Qingshan Town, Lin'an Economic Development Zone. Zhejiang, China 311305
Tel:(+86-571) 56975980 Fax:(+86-571) 56975955
Email: intl@narada.biz Website: www.naradabattery.com

Narada

SECTION 9: SULFURIC ACID PRECAUTIONS

INHALATION: Acid mist form formation process may cause respiratory irritation, remove from exposure and apply oxygen if breathing is difficult.

SKIN CONTACT: Acid may cause irritation, burns or ulceration. Flush with plenty of soap and water, remove contaminated clothing, and see physician if contact area is large or if blisters form.

EYE CONTACT: Acid may cause severe irritation, burns, cornea damage and blindness. Call physician immediately and flush with water until physician arrives.

INGESTION: Acid may cause irritation of mouth, throat, esophagus and stomach. Call physician. If patient is conscious, flush mouth with water, have the patient drink milk or sodium bicarbonate solution.

DO NOT GIVE ANYTHING TO AN UNCONSCIOUS PERSON.

SECTION 10: TRANSPORTATION REGULATIONS

Acceptable modes of transportation: air, rail, road and water.

Batteries must be protected so as to prevent short circuit and must be securely packed.

NARADA POWER SOURCE CO., LTD.
72 Jingguan Road, Qingshan Town, Lin'an Economic Development Zone. Zhejiang, China 311305
Tel:(+86-571) 56975980 Fax:(+86-571) 56975955
Email: intl@narada.biz Website: www.naradabattery.com

CFC CHAPTER 6 COMPLIANCE

TOTAL kWh = (190Ah X 12V)/1000 X 16 BATTERIES = 36.48 kWh
(SINCE <70 kWh OF CAPACITY, CFC CHAPTER 6, SECTION 608 NOT APPLICABLE)

BATTERY INFORMATION

(BATTERY CAPACITY DATA - 12V MONOBLOCKS)

BATTERY MODEL	TOTAL # OF BATTERY UNITS INSTALLED	TOTAL NOMINAL VOLTAGE	RATED CAPACITY (10 HOUR RATE)	kWh OF SINGLE BATTERY	= (RATED CAPACITY) x (NOMINAL VOLTAGE) / 1000
12DT190	16	12 V	190 Ah	2.28kWh	= 190Ah x 12V / 1000
		TOTAL kWh =	kWh OF SINGLE BATTERY x # OF BATTERIES		
		36.48kWh = 16 UNITS x 2.28kWh / UNIT			

5 BATTERY DATA CHART
1 1/2" = 1'-0"

PREPARED FOR

Sprint

12657 Alcosta Blvd, Suite 300
San Ramon, California 94583

PRECISION SITE DEVELOPMENT

5098 Foothills Blvd 3-119
Roseville, CA 95747

Sprint Cascade:

SF25XC335-A

Architect:

ARCHITECTURE PLANNING INTERIORS
Borges ARCHITECTURAL GROUP
1478 STONE POINT DRIVE SUITE 350 ROSEVILLE CA 95661
T | 916 782 7200
F | 916 773 3037
BORGESARCH.COM

SPRINT CASCADE:	SF25XC335-A
PROJECT NO:	T-16503-1
DRAWN BY:	DAG
CHECKED BY:	JM

REV	DATE	DESCRIPTION
G	07/26/19	90% ZD REV 6
F	05/31/19	90% ZD REV 5
E	05/02/19	90% ZD REV 4
D	03/13/19	90% ZD REV 3
C	10/23/18	90% ZD REV 2
B	09/14/18	90% ZD REV 1
A	02/27/18	90% ZD SUBMITTAL

Licensor:

IT IS A VIOLATION OF LAW FOR ANY PERSON, UNLESS THEY ARE ACTING UNDER THE DIRECTION OF A LICENSED PROFESSIONAL ENGINEER, TO ALTER THIS DOCUMENT.

Issued For:

07/26/19

90% ZD Rev 6

SHEET TITLE:

BATTERY SPECIFICATIONS

SHEET NUMBER:

A-□2

Plot Date:7/26/2019 4:20:20 PM File Name:T:\2016\T-16503_Precision Site Development LLC\SF25XC335-1\SF25XC335 Napa Perm\Sheets\A-4.2 Battery Specifications.dwg Plotted By:David Gome

Plot Date:7/26/2019 4:20:30 PM File NameT:\2016\T-16503_Precision Site Development LLC\SF25XC335-1\SF25XC335 Napa Perm\Sheets\A-4.3 Generator Specifications.dwg Plotted By:David Gome

SD030 | 2.4L | 30 kW
INDUSTRIAL DIESEL GENERATOR SET
EPA Certified Stationary Emergency

GENERAC | INDUSTRIAL POWER

STANDBY POWER RATING
30 kW, 38 kVA, 60 Hz

PRIME POWER RATING*
27 kW, 34 kVA, 60 Hz

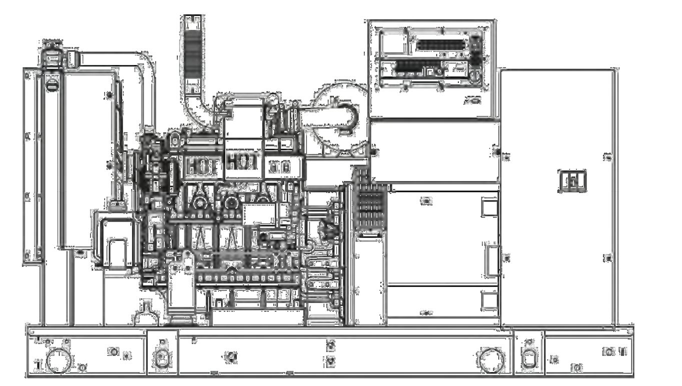

Image used for illustration purposes only

USA ENGINEERED & BUILT*

*Built in the USA using domestic and foreign parts

*EPA Certified Prime ratings are not available in the U.S. or its Territories.

**Certain options or customization may not hold certification valid.

CODES AND STANDARDS
Generac products are designed to the following standards:

- UL2200, UL508, UL142, UL498
- NFPA70, 99, 110, 37
- NEC700, 701, 702, 708
- ISO9001, 8528, 3046, 7637, Pluses #2b, 4
- NEMA ICS10, MG1, 250, ICS6, AB1
- ANSI C62.41

POWERING AHEAD
For over 50 years, Generac has led the industry with innovative design and superior manufacturing.

Generac ensures superior quality by designing and manufacturing most of its generator components, including alternators, enclosures and base tanks, control systems and communications software.

Generac's gensets utilize a wide variety of options, configurations and arrangements, allowing us to meet the standby power needs of practically every application.

Generac searched globally to ensure the most reliable engines power our generators. We choose only engines that have already been proven in heavy-duty industrial application under adverse conditions.

Generac is committed to ensuring our customers' service support continues after their generator purchase.

SD030 | 2.4L | 30 kW
INDUSTRIAL DIESEL GENERATOR SET
EPA Certified Stationary Emergency

GENERAC | INDUSTRIAL POWER

STANDARD FEATURES

ENGINE SYSTEM

General
- Oil Drain Extension
- Air Cleaner
- Fan Guard
- Stainless Steel flexible exhaust connection
- Critical Exhaust Silencer (enclosed only)
- Factory Filled Oil
- Radiator Duct Adapter (open set only)

Fuel System
- Fuel lockoff solenoid
- Primary fuel filter

Cooling System
- Closed Coolant Recovery System
- UV/Ozone resistant hoses
- Factory-Installed Radiator
- Radiator Drain Extension
- 50/50 Ethylene glycol antifreeze
- 120 VAC Coolant Heater

Engine Electrical System
- Battery charging alternator
- Battery cables
- Battery tray
- Solenoid activated starter motor
- Rubber-booted engine electrical connections

ALTERNATOR SYSTEM
- Ul2200 GENprotect ™
- 12 leads (3-phase, non 600 V)
- Class H insulation material
- Vented rotor
- 2/3 pitch
- Skewed stator
- Auxiliary voltage regulator power winding
- Amortisseur winding
- Brushless Excitation
- Sealed Bearings
- Automated manufacturing (winding, insertion, lacing, varnishing)
- Rotor dynamically spin balanced (get tolerance)
- Full load capacity alternator
- Protective thermal switch

GENERATOR SET
- Internal Genset Vibration Isolation
- Separation of circuits - high/low voltage
- Separation of circuits - multiple breakers
- Silencer Heat Shield
- Wrapped Exhaust Piping
- Silencer housed in discharge hood (enclosed only)
- Standard Factory Testing
- 2 Year Limited Warranty (Standby rated Units)
- 1 Year Limited Warranty (Prime rated Units)
- Silencer mounted in the discharge hood (enclosed only)

ENCLOSURE (IF SELECTED)
- Rust-proof fasteners with nylon washers to protect finish
- High performance sound-absorbing material
- Gasketed doors
- Stamped air-intake louvers
- Air discharge hoods for radiator-upward pointing
- Stainless steel lift off door hinges
- Stainless steel lockable handles
- Rhino Coat™- Textured polyester powder coat

TANKS (IF SELECTED)
- UL 142
- Double wall
- Vents
- Sloped top
- Sloped bottom
- Factory pressure tested (2 psi)
- Rupture basin alarm
- Fuel level
- Check valve in supply and return lines
- Rhino Coat™- Textured polyester powder coat
- Stainless hardware

CONTROL SYSTEM

Control Panel
- Digital H Control Panel - Dual 4x20 Display
- Programmable Crank Limiter
- 7-Day Programmable Exerciser
- Special Applications Programmable PLC
- RS-232/485
- All-Phase Sensing DVR
- Full System Status
- Utility Monitoring
- Low Fuel Pressure Indication
- 2-Wire Start Compatible
- Power Output (kW)
- Power Factor
- kW Hours, Total & Last Run
- Real/Reactive/Apparent Power
- All Phase AC Voltage
- All Phase Currents
- Oil Pressure
- Coolant Temperature
- Coolant Level
- Engine Speed
- Battery Voltage
- Frequency
- Date/Time Fault History (Event Log)
- Isochronous Governor Control
- Waterproof/sealed Connectors
- Audible Alarms and Shutdowns
- Not in Auto (Flashing Light)
- Auto/Off/Manual Switch
- E-Stop (Red Mushroom-Type)
- NFPA110 Level I and II (Programmable)
- Customizable Alarms, Warnings, and Events
- Modbus protocol
- Predictive Maintenance algorithm
- Sealed Boards
- Password parameter adjustment protection
- Single point ground
- 15 channel data logging
- 0.2 msec high speed data logging
- Alarm information automatically comes up on the display

Alarms
- Oil Pressure (Pre-programmable Low Pressure Shutdown)
- Coolant Temperature (Pre-programmed High Temp Shutdown)
- Coolant Level (Pre-programmed Low Level Shutdown)
- Low Fuel Pressure Alarm
- Engine Speed (Pre-programmed Over speed Shutdown)
- Battery Voltage Warning
- Alarms & warnings time and date stamped
- Alarms & warnings for transient and steady state conditions
- Snap shots of key operation parameters during alarms & warnings
- Alarms and warnings spelled out (no alarm codes)

SD030 | 2.4L | 30 kW
INDUSTRIAL DIESEL GENERATOR SET
EPA Certified Stationary Emergency

GENERAC | INDUSTRIAL POWER

CONFIGURABLE OPTIONS

ENGINE SYSTEM

General
- O Oil Make-Up System
- O Oil Heater
- O Industrial Exhaust Silencer

Fuel Electrical System
- O Flexible fuel lines
- O Primary fuel filter

Engine Electrical System
- O 10A UL battery charger
- O 2.5A UL battery charger
- O Battery Warmer

ALTERNATOR SYSTEM
- O Alternator Upsizing
- O Anti-Condensation Heater
- O Tropical coating
- O Permanent Magnet Excitation

CIRCUIT BREAKER OPTONS
- O Main Line Circuit Breaker
- O 2nd Main Line Circuit Breaker
- O Shunt Trip and Auxiliary Contact
- O Electronic Trip Breaker

GENERATOR SET
- O Gen-Link Communications Software (English Only)
- O 8 Load Position Load Center
- O 2 Year Extended Warranty
- O 5 Year Warranty
- O 5 Year Extended Warranty

ENCLOSURE
- O Weather Protected
- O Level 1 Sound Attenuation
- O Level 2 Sound Attenuation
- O Steel Enclosure
- O Aluminum Enclosure
- O 150 MPH Wind Kit
- O 12 VDC Enclosure Lighting Kit
- O 120 VAC Enclosure Lighting Kit
- O AC/DC Enclosure Lighting Kit
- O Door Alarm Switch

TANKS (Size on Last page)
- O Electrical Fuel Level
- O Mechanical Fuel Level
- O 54 Gal (204.4 L) Usable Capacity
- O 132 Gal (499.7 L) Usable Capacity
- O 211 Gal (798.7 L) Usable Capacity
- O 300 Gal (1135.6 L) Usable Capacity
- O 8" Vent Extension
- O 13" Vent Extension
- O 19" Vent Extension

CONTROL SYSTEM
- O 21-Light Remote Annunciator
- O Remote Relay Panel (8 or 16)
- O Oil Temperature Sender with Indication Alarm
- O Remote E-Stop (Break Glass-Type, Surface Mount)
- O Remote E-Stop (Red Mushroom-Type, Surface Mount)
- O Remote E-Stop (Red Mushroom-Type, Flush Mount)
- O Remote Communication - Modem
- O Remote Communication - Ethernet
- O 10A Run Relay
- O Ground Fault Indication and Protection Functions

ENGINEERED OPTIONS

ENGINE SYSTEM
- O Coolant heater ball valves
- O Block Heaters
- O Fluid containment pans

ALTERNATOR SYSTEM
- O 3rd Breaker Systems

CONTROL SYSTEM
- O Spare inputs (x4) / outputs (x4) - H Panel Only
- O Battery Disconnect Switch

GENERATOR SET
- O Special Testing
- O IBC Seismic Certification

ENCLOSURE
- O Motorized Dampers
- O Door switched for intrusion alert
- O Enclosure ambient heaters

TANKS
- O Overfill Protection Valve
- O UL2085 Tank
- O ULC S-601 Tank
- O Stainless Steel Tank
- O Special Fuel Tanks (MIDEQ and FL DEP/DERM, etc.)
- O Vent Extensions

RATING DEFINITIONS

Standby - Applicable for a varying emergency load for the duration of a utility power outage with no overload capability.

Prime - Applicable for supplying power to a varying load in lieu of utility for an unlimited amount of running time. A 10% overload capacity is available for 1 out of every 12 hours. The Prime Power option is only available on International applications. Power ratings in accordance with ISO 8528-1, Second Edition

SD030 | 2.4L | 30 kW
INDUSTRIAL DIESEL GENERATOR SET
EPA Certified Stationary Emergency

GENERAC | INDUSTRIAL POWER

APPLICATION AND ENGINEERING DATA

ENGINE SPECIFICATIONS

General

Make	Generac
EPA Emissions Compliance	Stationary Emergency
EPA Emissions Reference	See Emissions Data Sheet
Cylinder #	4
Type	In-Line
Displacement - L (cu In)	2.4 (146.46)
Bore - mm (in)	90 (3.54)
Stroke - mm (in)	94 (3.70)
Compression Ratio	21.3:1
Intake Air Method	Turbocharged
Cylinder Head Type	Cast Iron
Piston Type	Aluminium

Engine Governing

Governor	Electronic Isochronous
Frequency Regulation (Steady State)	+/- 0.25%

Lubrication System

Oil Pump Type	Gear
Oil Filter Type	Full Flow
Crankcase Capacity - L (qts)	6.2 (6.52)

Cooling System

Cooling System Type	Closed Recovery
Water Pump	Pre-Lubed, Self Sealing
Fan Type	Pusher
Fan Speed (rpm)	2698
Fan Diameter mm (in)	560 (22)
Coolant Standard Wattage	1500
Coolant Heater Standard Voltage	120 VAC

Fuel System

Fuel Type	Ultra Low Sulfur Diesel Fuel
Fuel Specifications	ASTM
Fuel Filtering (microns)	5
Fuel Injection	Distribution Injection Pump
Fuel Pump Type	Engine Driven Gear
Injector Type	Mechanical
Fuel Supply Line mm (in)	7.94 (0.31)
Fuel Return Line mm (in)	7.94 (0.31)

Engine Electrical System

System Voltage	12 VDC
Battery Charging Alternator	Std
Battery Size	See Battery Index 0161970SBY
Battery Voltage	12 VDC
Ground Polarity	Negative

ALTERNATOR SPECIFICATIONS

Standard Model	390
Poles	4
Field Type	Revolving
Insulation Class - Rotor	H
Insulation Class - Stator	H
Total Harmonic Distortion	<5%
Telephone Interference Factor (TIF)	<50
Standard Excitation	Synchronous
Bearings	Single Sealed Cartridge
Coupling	Direct, Flexible Disc
Load Capacity - Standby	100%
Prototype Short Circuit Test	Yes
Voltage Regulator Type	Digital
Number of Sensed Phases	All
Regulation Accuracy (Steady State)	±0.25%

SD030 | 2.4L | 30 kW
INDUSTRIAL DIESEL GENERATOR SET
EPA Certified Stationary Emergency

GENERAC | INDUSTRIAL POWER

OPERATING DATA

POWER RATINGS

		Standby	
Single-Phase 120/240 VAC @1.0pf	30 kW	Amps:	125
Three-Phase 120/208 VAC @0.8pf	30 kW	Amps:	104
Three-Phase 120/240 VAC @0.8pf	30 kW	Amps:	90
Three-Phase 277/480 VAC @0.8pf	30 kW	Amps:	46
Three-Phase 346/600 VAC @0.8pf	30 kW	Amps:	36

STARTING CAPABILITIES (sKVA)

sKVA vs. Voltage Dip

		480 VAC						208/240 VAC					
Alternator	kW	10%	15%	20%	25%	30%	35%	10%	15%	20%	25%	30%	35%
Standard	35	24	36	48	60	72	84	18	27	36	45	54	63
Upsize 1	40	27	41	54	68	81	95	20	31	41	51	61	71
Upsize 2	50	34	52	69	86	103	120	26	39	52	65	77	90

FUEL CONSUMPTION RATES*

Diesel - gph (lph)

Fuel Pump Lift - ft (m)
3 (1)

Total Fuel Pump Flow (Combustion + Return)
4.5 gph

Percent Load	gph (lph)
25%	0.92 (3.5)
50%	1.45 (5.5)
75%	1.96 (7.4)
100%	2.74 (10.4)

* Fuel supply installation must accommodate fuel consumption rates at 100% load.

COOLING

		Standby
Coolant Flow per Minute	gpm (lpm)	10 (38)
Coolant System Capacity	gal (L)	2.8 (10.95)
Heat Rejection to Coolant	BTU/hr	111,000
Inlet Air	cfm (m3/hr)	4,500 (7647)
Max. Operating Radiator Air Temp	Fº (Cº)	122 (50)
Max. Ambient Temperature (before derate)	Fº (Cº)	104 (40)
Maximum Radiator Backpressure	in H_2O	0.5

COMBUSTION AIR REQUIREMENTS

		Standby
Flow at Rated Power	cfm (m3/min)	90 (2.55)

ENGINE

		Standby
Rated Engine Speed	rpm	1800
Horsepower at Rated kW**	hp	49
Piston Speed	ft/min (m/min)	1110 (338)
BMEP	psi	153

** Refer to "Emissions Data Sheet" for maximum bHP for EPA and SCAQMD permitting purposes.

EXHAUST

		Standby
Exhaust Flow (Rated Output)	cfm (m^3/min)	230 (391)
Max. Backpressure (Post Silencer)	inHg (Kpa)	1.5 (5.1)
Exhaust Temp (Rated Output)	ºF (ºC)	850 (454)
Exhaust Outlet Size (Open Set)	mm (in)	63.5 (2.5)

Deration – Operational characteristics consider maximum ambient conditions. Derate factors may apply under atypical site conditions. Please consult a Generac Power Systems Industrial Dealer for additional details. All performance ratings in accordance with ISO3046, BS5514, ISO8528 and DIN6271 standards.

SD030 | 2.4L | 30 kW
INDUSTRIAL DIESEL GENERATOR SET
EPA Certified Stationary Emergency

GENERAC | INDUSTRIAL POWER

DIMENSIONS AND WEIGHTS*

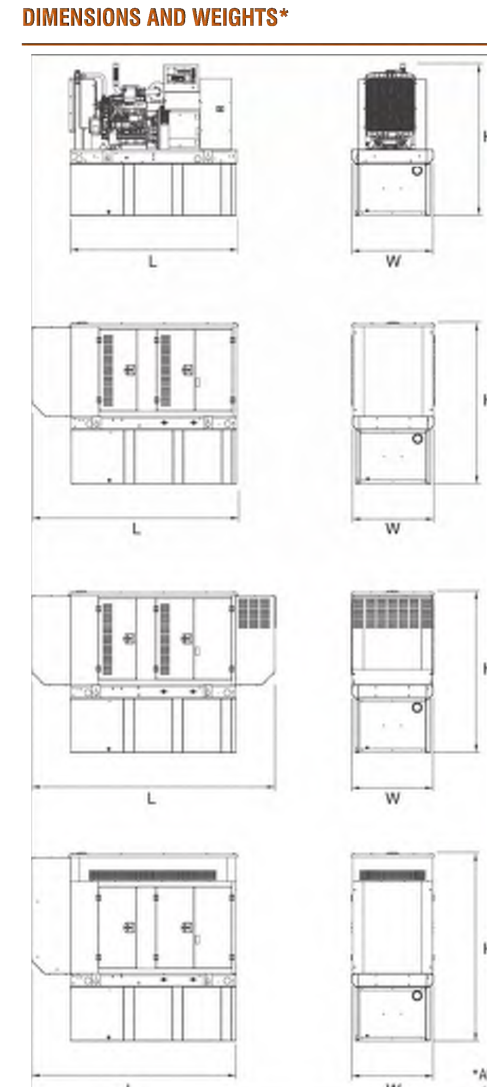

OPEN SET

RUN TIME HOURS	USABLE CAPACITY GAL (L)	L x W x H in (mm)	WT lbs (kg) - Tank & Open Set
NO TANK	-	76 (1930.4) x 38 (914.4) x 46 (1168.4)	2060 (934)
20	54 (204.4)	76 (1930.4) x 38 (914.4) x 59 (1498.6)	2540 (1152)
48	132 (499.7)	76 (1930.4) x 38 (914.4) x 71 (1803.4)	2770 (1257)
77	211 (798.7)	76 (1930.4) x 38 (914.4) x 83 (2108.2)	2979 (1351)
109	300 (1135.6)	93 (2362.2) x 38 (914.4) x 87 (2209.8)	3042 (1380)

STANDARD ENCLOSURE

RUN TIME HOURS	USABLE CAPACITY GAL (L)	L x W x H in (mm)	WT lbs (kg) - Enclosure Only Steel	Aluminum
NO TANK	-	95 (2413) x 38 (965.2) x 50 (1270)	302 (137)	191 (87)
20	54 (204.4)	95 (2413) x 38 (965.2) x 63 (1600.2)		
48	132 (499.7)	95 (2413) x 38 (965.2) x 75 (1905)		
77	211 (798.7)	95 (2413) x 38 (965.2) x 87 (2209.8)		
109	300 (1135.6)	95 (2413) x 38 (965.2) x 91 (2311.4)		

LEVEL 1 ACOUSTIC ENCLOSURE

RUN TIME HOURS	USABLE CAPACITY GAL (L)	L x W x H in (mm)	WT lbs (kg) - Enclosure Only Steel	Aluminum
NO TANK	-	113 (2870.2) x 38 (965.2) x 50 (1270)	455 (206)	288 (131)
20	54 (204.4)	113 (2870.2) x 38 (965.2) x 63 (1600.2)		
48	132 (499.7)	113 (2870.2) x 38 (965.2) x 75 (1905)		
77	211 (798.7)	113 (2870.2) x 38 (965.2) x 87 (2209.8)		
109	300 (1135.6)	113 (2870.2) x 38 (965.2) x 91 (2311.4)		

LEVEL 2 ACOUSTIC ENCLOSURE

RUN TIME HOURS	USABLE CAPACITY GAL (L)	L x W x H in (mm)	WT lbs (kg) - Enclosure Only Steel	Aluminum
NO TANK	-	95 (2413) x 38 (965.2) x 62 (1574.8)	460 (209)	291 (132)
20	54 (204.4)	95 (2413) x 38 (965.2) x 75 (1905)		
48	132 (499.7)	95 (2413) x 38 (965.2) x 87 (2209.8)		
77	211 (798.7)	95 (2413) x 38 (965.2) x 99 (2514.6)		
109	300 (1135.6)	95 (2413) x 38 (965.2) x 103 (2616.2)		

*All measurements are approximate and for estimation purposes only. Sound dBA can be found on the sound data sheet. Enclosure Only weight is added to Tank & Open Set weight to determine total weight.

YOUR FACTORY RECOGNIZED GENERAC INDUSTRIAL DEALER

Specification characteristics may change without notice. Dimensions and weights are for preliminary purposes only. Please consult a Generac Power Systems Industrial Dealer for detailed installation drawings.

Generac Power Systems, Inc. | P.O. Box 8 | Waukesha, WI 53187
P: (262) 544-4811 © 2015 Generac Power Systems, Inc. All rights reserved. All specifications are subject to change without notice.

Part No 0K5085
Rev. D 06/08/15

PREPARED FOR

Sprint

12657 Alcosta Blvd, Suite 300
San Ramon, California 94583

PRECISION SITE DEVELOPMENT

5098 Foothills Blvd 3-119
Roseville, CA 95747

Sprint Cascade:

SF25XC335-A

Architect:

ARCHITECTURE PLANNING INTERIORS
Borges ARCHITECTURAL GROUP
1478 STONE POINT DRIVE SUITE 350 ROSEVILLE CA 95661
T | 916 782 7200
F | 916 773 3037
BORGESARCH.COM

SPRINT CASCADE:	SF25XC335-A
PROJECT NO:	T-16503-1
DRAWN BY:	DAG
CHECKED BY:	JM

REV	DATE	DESCRIPTION
G	07/26/19	90% ZD REV 6
F	05/31/19	90% ZD REV 5
E	05/02/19	90% ZD REV 4
D	03/13/19	90% ZD REV 3
C	10/23/18	90% ZD REV 2
B	09/14/18	90% ZD REV 1
A	02/27/18	90% ZD SUBMITTAL

Licensor:

IT IS A VIOLATION OF LAW FOR ANY PERSON, UNLESS THEY ARE ACTING UNDER THE DIRECTION OF A LICENSED PROFESSIONAL ENGINEER, TO ALTER THIS DOCUMENT.

Issued For:

07/26/19

90% ZD Rev 6

SHEET TITLE:

GENERATOR SPECIFICATIONS

SHEET NUMBER:

A-□3

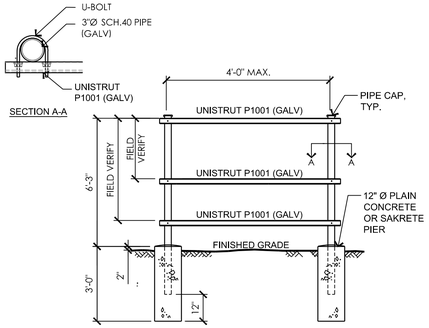

20 H-FRAME
3/4" = 1'-0"

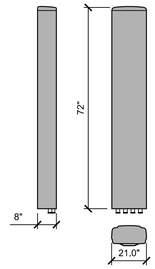

DIMENSIONS:

HEIGHT:	1828mm (72.0")
WIDTH:	533mm (21.0")
DEPTH:	203mm (8.0")
WEIGHT:	56kg (123.46) lbs

16 TYPICAL PANEL ANTENNA
NTS

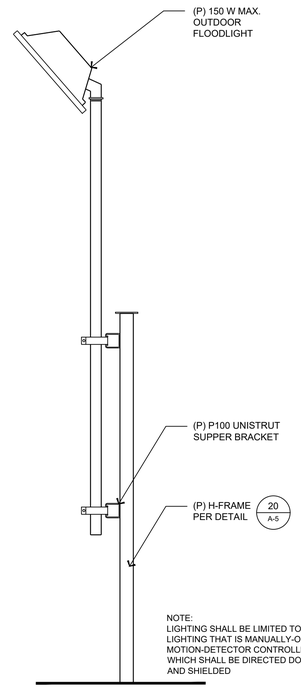

NOTE:
LIGHTING SHALL BE LIMITED TO SECURITY LIGHTING THAT IS MANUALLY-OPERATED OR MOTION-DETECTOR CONTROLLED, AND WHICH SHALL BE DIRECTED DOWN-WARD AND SHIELDED

11 SERVICE LIGHT
3/4" = 1'-0"

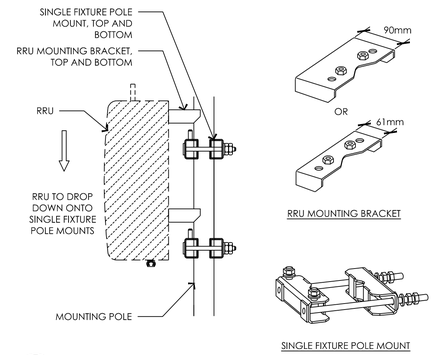

8 RRU MOUNTING DETAIL - POLE
3/8" = 1'-0"

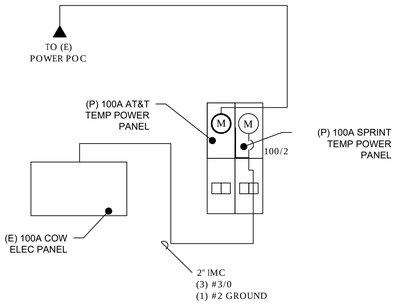

4 SINGLE LINE DIAGRAM
1/2" = 1'-0"

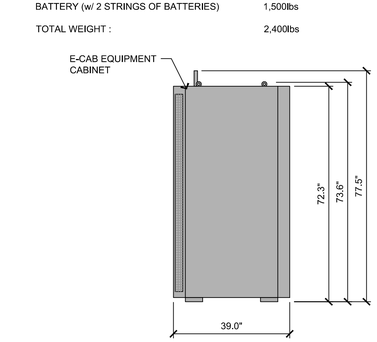

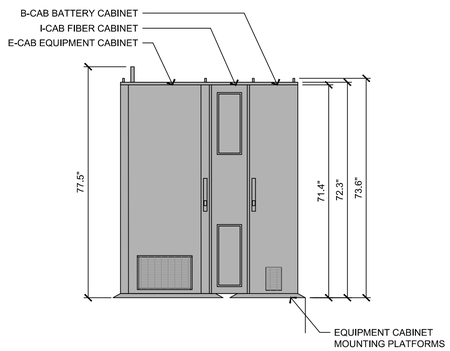

ELTEK Bcab/Ecab MONOPOLE CABINETS

EQUIPMENT	740lbs
FIBER	160lbs
BATTERY (w/ 2 STRINGS OF BATTERIES)	1,500lbs
TOTAL WEIGHT :	2,400lbs

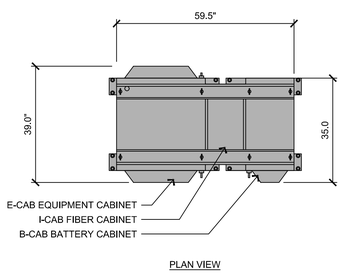

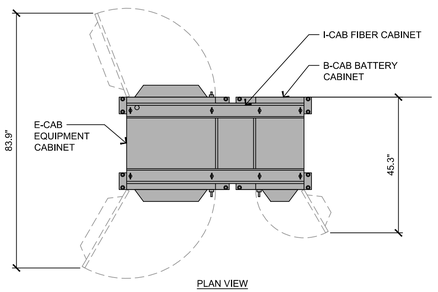

18 ELTEK CABINET DETAIL
1/2" = 1'-0"

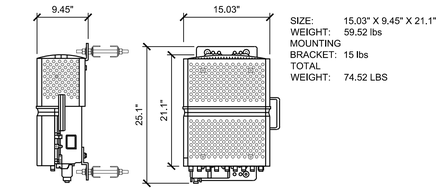

SIZE: 15.03" X 9.45" X 21.1"
WEIGHT: 59.52 lbs
MOUNTING BRACKET: 15 lbs
TOTAL WEIGHT: 74.52 LBS

NOTES
GENERAL CONTRACTOR TO ENSURE THAT ALL RRU'S RECEIVE ELECTRICAL POWER WITHIN 24 HOURS OF BEING REMOVED FROM THE MANUFACTURER'S PACKAGING. DO NOT OPEN RRU PACKAGES IN THE RAIN.

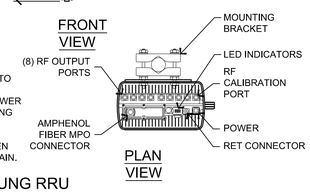

7 2.5 SAMSUNG RRU
1" = 1'-0"

NOTES:

THE ELEVATION AND LOCATION OF THE GPS ANTENNA SHALL BE IN ACCORDANCE WITH THE FINAL RF REPORT.

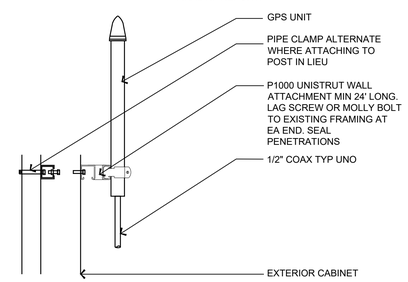

3 GPS MOUNT DETAIL
3/4" = 1'-0"

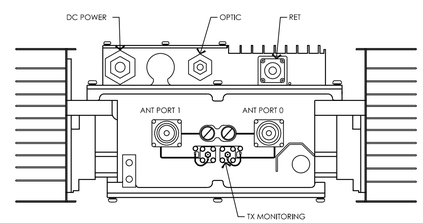

ENLARGED BOTTOM VIEW

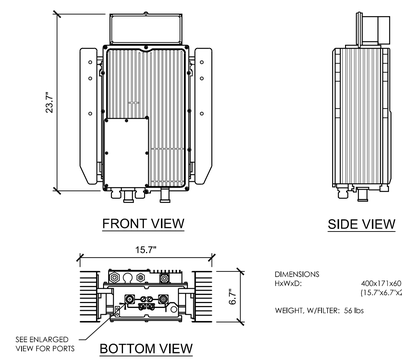

DIMENSIONS
HxWxD: 400x171x601.7mm (15.7"x6.7"x23.7")

WEIGHT, W/FILTER: 56 lbs

10 800MHZ RRU MECHANICAL SPECIFICATIONS
3/8" = 1'-0"

NOTES:

1. 24"X24"X8" BOX MOUNTED NEXT TO OR BELOW EQUIPMENT LOCATION.
2. 3/4 " BACKBOARD IN BOX
3. POWER LEADS MUST BE IN FLEX CONDUIT
4. 6"X6"X4" PLASTIC BOX MOUNTED ON RIGHT SIDE OF BACKBOARD
5. TERMINATION BLOCK TO BE PLACED IN 6X6 WITH FUSE
6. RUN GROUND WIRE ALONG OUTSIDE EDGE ON RIGHT SIDE OF BOX. MOVE GROUNDING BUSS TO RIGHT SIDE IF NECESSARY.
7. STUB OUT FLEX CONDUIT FROM TOP OF BOX TO MATCH 3931 CONDUIT PORTS. STUBS SHOULD BE 10 TO 12 INCHES IN LENGTH.
8. CARRIER WILL TERMINATE P:OWER ON ONE SIDE OF TERMINATION BLOCK. AT&T WILL TERMINATE ON THEIR SIDE, AND POP IN FUSE
9. FUSE SHOULD BE LEFT IN BOX PRIOR TO TURN UP

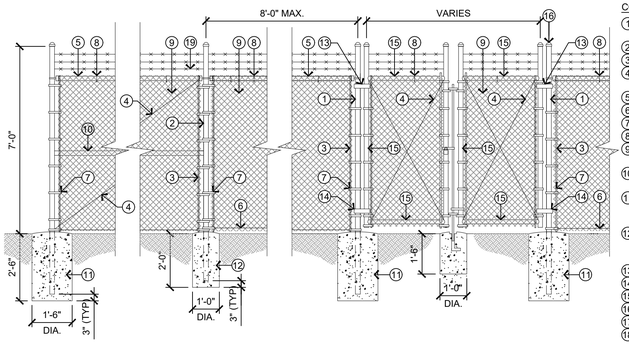

CONSTRUCTION NOTES

1. GATE, END OR CONER POST, 3" DIA. SCH. 40 PIPE (HDG) PIPE.
2. LINE POST, 2" DIA. SCH. 40 (HDG) PIPE
3. TENSION BAR, 1/4" □3/4" (HDG)
4. 3/8" STEEL TRUSS ROD W/ TIGHTNER □ ALL CORNERS, ANCHOR ENDS & GATE POST. ALL (HDG).
5. 1 1/4" DIA. SCH. 40 (HDG) PIPE.
6. TENSION WIRE, 6 GA. GALV. COIL SPRING WIRE
7. 1/8" □3/4" STRETCHER BANDS □ 12" O.C.
8. NO. 9 GA. TIE WIRE □ 14" O.C.
9. 2" □2" MESH □9 NO. 9 GA. GALV. CHAIN LINK FABRIC
10. 1 1/4" SCH. 40 (HDG) PIPE □ CONORS ANCHORS, & ENDS
11. CORNER AND GATE POST SHALL HAVE 18" RND. BY 30" DEEP CONC. FT'G. INTO NATIVE SOIL OR 90% COMPACTED SOIL.
12. LINE POST SHALL HAVE 12" BY 24" DEEP CONC. FT'G. INTO NATIVE SOIL OR 90% COMPACTED SOIL.
13. TOP HINGE PER MFR., TYP.
14. BOTTOM HINGE PER MFR., TYP.
15. WELD 2" ROUND GATE FRAME, TYP.
16. POST CAP(HDG), TYP.
17. FULL HEIGHT DROP BOLT GATE LOCK
18. MUSHROOM TYP. GATE ANCHOR TO PREVENT FREEZING CONC. BASE TO BE 12" DIA □18" DEEP
19. ANTI-CLIMB WIRE FENCING

NOTE:
PROVIDE MIN. 2 SACK CONC. FOR POST FOOTING

17 CHAIN LINK FENCE
3/8" = 1'-0"

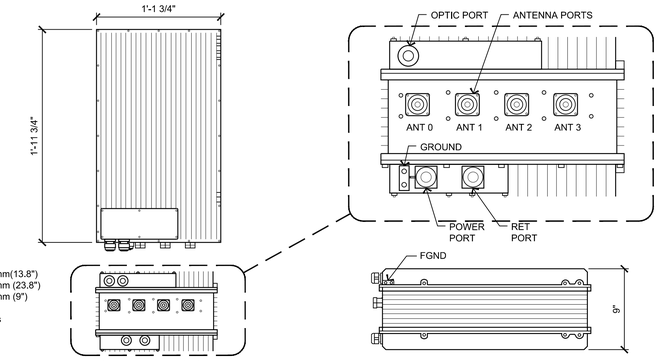

DIMENSIONS

HEIGHT:	350mm(13.8")
WIDTH:	605mm (23.8")
DEPTH:	228mm (9")
WEIGHT (w/ FILTER):	65lbs

9 1.9GHZ RRU MECHANICAL SPECIFICATIONS
3" = 1'-0"

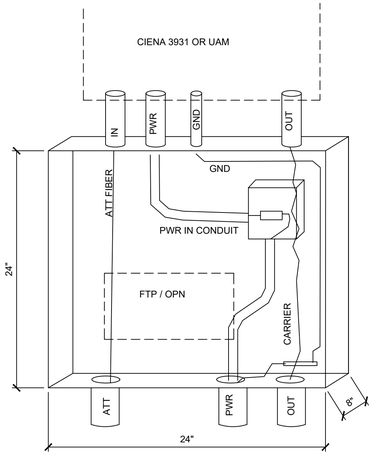

1 TELCO PULL CAN DETAIL
NOT TO SCALE

PREPARED FOR

Sprint

12657 Alcosta Blvd, Suite 300
San Ramon, California 94583

PRECISION

5098 Foothills Blvd 3-119
Roseville, CA 95747

Sprint Cascade:

SF25XC335-A

Architect:

Borges ARCHITECTURAL GROUP
ARCHITECTURE PLANNING INTERIORS
1478 STONE POINT DRIVE SUITE 350 ROSEVILLE CA 95661
T:916. 782.7200 F:916. 773.3037
BORGESARCH.COM

SPRINT CASCADE:	SF25XC335-A
PROJECT NO:	T-16503-1
DRAWN BY:	DAG
CHECKED BY:	JM

REV	DATE	DESCRIPTION
G	07/26/19	90% ZD REV 6
F	05/31/19	90% ZD REV 5
E	05/02/19	90% ZD REV 4
D	03/13/19	90% ZD REV 3
C	10/23/18	90% ZD REV 2
B	09/14/18	90% ZD REV 1
A	02/27/18	90% ZD SUBMITTAL

Licensor:

IT IS A VIOLATION OF LAW FOR ANY PERSON, UNLESS THEY ARE ACTING UNDER THE DIRECTION OF A LICENSED PROFESSIONAL ENGINEER, TO ALTER THIS DOCUMENT.

Issued For:

07/26/19

90% ZD Rev 6

SHEET TITLE:

CONSTRUCTION DETAILS

SHEET NUMBER:

A-5

Plot Date: 7/26/2019 4:29:50 PM File Name: P:\2016\T-16503_Precision Site Development LLC\SF25XC335- \SF25XC335 Napa Pres\Sheet\A-5 Construction Details.dwg Plotted By:David Gomez